City of Cannon Beach
Agenda

VIRTUAL ATTENDANCE ONLY

In keeping with the Governor's social distancing direction and to minimize the spread of COVID-19, the City of Cannon Beach has issued an Administrative Order, effective immediately, all public access and participation for City Council, Commissions, Boards and Committees meeting will be virtual until further notice. Please visit our website at ci.cannon-beach.or.us for viewing options and how to submit public comment.

Meeting: Planning Commission
Date: **Thursday, February 24, 2022**
Time: **6:00 p.m.**
Location: Council Chambers, City Hall

6:00 CALL TO ORDER

6:01 (1) **Approval of Agenda**

6:02 (2) **Consideration of the Minutes for the Planning Commission Meeting of January 27, 2022**
If the Planning Commission wishes to approve the minutes, an appropriate motion is in order.

ACTION ITEMS

6:05 (6) **Public Hearing and Consideration of CU# 21-03, Jacqueline O. Brown request, for a Conditional Use Permit for shoreline stabilization at 116 N. Laurel St.**

CU 21-03, Jacqueline O. Brown Revocable Trust request for a Conditional Use permit to replace approximately 50 cubic yards of sand that has eroded the bank on the west side of the property. The property is located at 116 N. Laurel St. (Tax Lot 04000, Map 51019DD) in a Residential Medium Density (R2) and Oceanfront Management Overlay (OM) zone. The request will be reviewed under Cannon Beach Municipal Code 17.14.030 Conditional Uses Permitted, 17.42.060 Specific Standards and 17.80.230 & 360 Shoreline Stabilization & Preservation Grading.

6:25 (3) **Public Hearing and Consideration of AA# 22-01, Greg Hathaway request, on behalf of Jeff & Jennifer Harrison for an Appeal of an Administrative Decision to approve a building/development permit for Harding-Bouvet at 534 N. Laurel Street**

AA 22-01, Jeff and Jennifer Harrison appeal of the City's approval to issue a development/building permit for 534 N Laurel Street. The property is located at 534 N Laurel Street (Tax Lot 07002, Map 51019AD), in a Residential Medium Density (R2) zone. The request will be reviewed pursuant to Municipal Code, Section 17.88.160, Review consisting of additional evidence or de novo review and

applicable sections of the zoning ordinance, conditions of approval of the Cannon Beach Preservation Planned Development Subdivision and approved plat.

INFORMATIONAL ITEMS

6:50 (4) **Tree Report**

(5) **Ongoing Planning Items:**
Transportation System Plan: @ www.cannonbeachtsp.com;
Code Audit Update Joint Work Session, Wednesday, March 2, 2022;

(12) **Good of the Order**

7:10 (13) **ADJOURNMENT**

Please note that agenda items may not be considered in the exact order listed, and all times shown are tentative and approximate. Documents for the record may be submitted prior to the meeting by email, fax, mail, or in person. For questions about the agenda, contact Administrative Assistant, Katie Hillenhagen at Hillenhagen@ci.cannon-beach.or.us or (503) 436-8054. The meeting is accessible to the disabled. If you need special accommodations to attend or participate in the meeting per the Americans with Disabilities Act (ADA), please contact the City Manager at (503) 436.8050. TTY (503) 436-8097. This information can be made in alternative format as needed for persons with disabilities.

Posted: February 17 2022

Join Zoom Meeting:

Meeting URL: https://us02web.zoom.us/j/83508783839?pwd=Z0RlYnJFK2ozRmE2TkRBRUFJNlg0dz09
Meeting ID: 835 0878 3839
Password: 801463

One Tap Mobile:

+16699006833,,83508783839#,,1#,801463# US (San Jose)
+13462487799,,83508783839#,,1#,801463# US (Houston)

Dial By Your Location:

+1 669 900 6833 US (San Jose)
+1 253 215 8782 US (Tacoma)
Meeting ID: 835 0878 3839
Password: 801463

View Our Live Stream:

View our **Live Stream** on YouTube!

Virtual Participation & Public Comment for Meetings:

If you wish to provide public comment as a virtual meeting participant, you must submit it by ***noon,*** the day of the meeting, to planning@ci.cannon-beach.or.us. All written comments received by the deadline will be distributed to the commission, parties of record and the appropriate staff prior to the start of the meeting. The written comments will be included in the record copy of the meeting.

You may also request to speak virtually during this meeting. You must submit your request to speak by ***noon***, the day of the meeting, to planning@ci.cannon-beach.or.us. If you wish to speak to an issue, please provide that information within the 'subject' or 'body' of your text. If it is not directed at a particular issue, Public Comment may be taken at the beginning of the meeting.

Minutes of the
CANNON BEACH PLANNING COMMISSION
Thursday, January 27, 2022

Present: Chair Daryl Johnson & Commissioner Barb Knop in person
Commissioners, Janet Patrick, Charles Bennett, Clay Newton, Lisa Kerr and Anna Moritz via Zoom

Excused:

Staff: Director of Community Development Jeff Adams, Land Use Attorney Bill Kabeiseman, City Planner Robert St. Clair and Administrative Assistant Katie Hillenhagen

CALL TO ORDER

Chair Johnson called the meeting to order at 6:02 p.m.

ACTION ITEMS

(1) Approval of Agenda

Motion: Kerr moved to approve the agenda as presented; Bennett seconded the motion.

Vote: Kerr, Newton, Knop, Moritz, Bennett and Chair Johnson voted AYE; the motion passed

(2) Consideration of the Minutes for the Planning Commission Meeting of December 2, 2021

Motion: Knop moved to approve the minutes; Newton seconded the motion.

Vote: Kerr, Newton, Knop, Bennett and Chair Johnson voted AYE; the motion passed

(3) Consideration of the Minutes for the Planning Commission Meeting of December 21, 2021

Kerr had an edit for the first paragraph on page 4.

Chair Johnson had an edit for page 5. He wanted to clarify that he brought up the option of a folding ladder to show that there are options to the proposal that were not given to them.

Knop had an edit for page 5. Knop, her name was misspelled.

Motion: Kerr moved to approve the minutes; Bennett seconded the motion.

Vote: Kerr, Knop, Bennett and Chair Johnson voted AYE; the motion passed

(4) Election of Officers

Chair Johnson asked for nominations for vice chair.

Kerr asked if Johnson could stay till the end of his term and then the new chair would take over. Kerr thought they should elect someone who could serve as chair for a while, someone who's term was not ending soon.

The other commissioners agreed that Johnson should stay on till he finished his term in April. Kabeiseman and Adams said that they would check but they did not think that there was a problem with this option.

Motion: Kerr nominated Johnson as chair until April, at which time they will have elections for a new chair; Knop seconded the nomination.

Vote: Kerr, Knop, Newton, Bennett, Moritz and Chair Johnson voted AYE; the motion passed

Motion: Kerr nominated Knop as the vice chair; Newton seconded the nomination.

Knop said she would serve as long as there was a new election in April.

Vote: Kerr, Knop, Newton, Bennett, Moritz and Chair Johnson voted AYE; the motion passed

(5) Chair Johnson noted that remands were rare, and this would be considered as a continuance with new information being added to the record.

Remand of AA# 21-01, Jeff & Jennifer Harrison request for an Appeal of an Administrative Decision to approve a building/development permit for M.J. Najimi at 544 N. Laurel Street
Remand of the Jeff and Jennifer Harrison appeal of the City's approval to issue a development/building permit for 544 N Laurel Street. The property is located at 544 N Laurel Street (Tax Lot 07000, Map 51019AD), and in a Residential Medium Density (R2) zone. The request will be reviewed pursuant to Municipal Code, Section 17.88.160, Review consisting of additional evidence or de novo review and applicable sections of the zoning ordinance, conditions of approval of the Cannon Beach Preservation Planned Development Subdivision and approved plat.

No one objected to the jurisdiction of the Planning Commission to hear this matter at this time. Chair Johnson asked if any Commissioner had any conflict of interest. There were none. Chair Johnson asked if any Commissioner had personal bias to declare. There were none. Chair Johnson asked if any commissioner had any ex parte contacts to declare. There were none. The commissioners declared their site visits.

Adams read his staff report (see staff report in packet for full details). Adams gave a brief history of the matter. The Planning Commission decision was appealed to the City Council. Council remanded it back to the PC in light of new evidence. Adams noted that the Harding garage is scheduled to be demolished. He also noted that Mr. Harrison proposed a condition of approval requiring the full demolition of the garage before the issuance of the building permit. Adams said he would read Mr. Harrison's comment into the record later. Alterman gave an alternate condition requiring the Harding garage to be completely demolished before the Certificate of Occupancy is issued.

Newton asked about the timeline of the demolition.

Adams said the demo permit had been issued. He noted that the firm doing the demo is also doing another project in town. Once that is done, they will have it removed. They have prepped the site for removal.

Chair Johnson stated that the pertinent criteria were listed in the staff report and criteria sheets next to the west door; testimony, arguments and evidence must be directed toward those criteria; failure to raise an issue accompanied by statements or evidence sufficient to afford the decision maker and the parties an opportunity to respond to the issue precludes appeal based on that issue; prior to the conclusion of the initial evidentiary hearing, any participant may request an opportunity to present additional testimony, arguments or evidence regarding the application. The Planning Commission shall grant such requests by continuing the public hearing or leaving the record open for additional written testimony, arguments or evidence; persons who testify shall first receive recognition from the Chair, state their full name and mailing address, and if appearing in a representative capacity, identify whom they represent.

Chair Johnson asked if the applicant wished to make a presentation.

Dean Alterman, 805 SW Broadway St. Suite 1580, Portland, OR. Alterman said that he is here on behalf of Mr. MJ Najimi. Alterman pointed out that the easement that allowed the Harding garage to be built has been modified so that a building cannot be there. He thought that a compromise for the condition of approval could be that once the demolition starts the building permit can be issued. He asked that they allow Mr. Najimi to begin construction either immediately or when the demolition begins. He asked them to keep in mind that there are not many contractors on the Oregon Coast.

Chair Johnson called for proponents of the request. Adams read Harrison's comments (for details see comments attached at the end of these minutes). Harrison urged the commission not to approve the building permit until the demolition is finished.

Dean Alterman said that he appreciates the points that Mr. Harrison made, but those are comments for the developer. He pointed out that the max square footage for all lots within the development is smaller than what would otherwise have been allowed in the R2 zone. He also said that the size of this house will be balanced out in another lot where the max square footage is 600. Alterman urged them to approve with either his or Mr. Hathaway's condition of approval.

Chair Johnson closed the hearing.

Newton moved to issue the building permit with the condition that the Certificate of Occupancy not be issued until the garage is completely removed.

Kerr said that they should not issue a building permit until the garage is removed. She thought that there was a matter of broken trust on this property. She thought a compromise could be to approve the building permit once the demolition has begun.

Chair Johnson and Knop agreed that they should not issue a permit until the garage is removed. Newton and Moritz said that was fine with them.

Kabeiseman asked if there was a second to Newton's motion. There was not so Kerr proposed a new motion.

Motion: Kerr moved to issue the building permit once the demolition of the Harding garage is complete; Knop seconded the motion.

Vote: Kerr, Newton, Knop, Moritz, Bennett and Chair Johnson voted AYE; the motion passed

(6) Public Hearing and Consideration of CU# 21-03, Jacqueline O. Brown request, for a Conditional Use Permit for shoreline stabilization at 116 N. Laurel St.

Jacqueline O. Brown Revocable Trust request for a Conditional Use permit to replace approximately 50 cubic yards of sand that has eroded the bank on the west side of the property. The property is located at 116 N. Laurel St. (Tax Lot 04000, Map 51019DD) in a Residential Medium Density (R2) and Oceanfront Management Overlay (OM) zone. The request will be reviewed under Cannon Beach Municipal Code 17.14.030 Conditional Uses Permitted, 17.42.060 Specific Standards and 17.80.230 & 360 Shoreline Stabilization & Preservation Grading.

Chair Johnson stated that the hearing has been postponed until the February meeting anyone who wishes to make comment can send comment or attend the next meeting.

(7) Public Hearing and Consideration of CU# 21-04, LBC Trust request, for a Conditional Use Permit for shoreline stabilization at 4664 Logan Ln.

Mike Morgan, on behalf of The LBC Trust, Mark Smith, Trustee, request for a Conditional Use permit for shoreline stabilization. The property is located at 4664 Logan Lane (Tax Lot 03401, Map 41006CB) in Residential Lower Density (RL) and Oceanfront Management Overlay (OM) Zone. The request will be reviewed under Cannon Beach Municipal Code 17.10.030 Conditional Uses Permitted, 17.42.060 Specific Standards and 17.80.230 & 360 Shoreline Stabilization & Preservation Grading.

No one objected to the jurisdiction of the Planning Commission to hear this matter at this time. Chair Johnson asked if any Commissioner had any conflict of interest. There were none. Chair Johnson asked if any Commissioner had personal bias to declare. There were none. Chair Johnson asked if any commissioner had any ex parte contacts to declare. There were none. The commissioners declared their site visits.

St. Clair read the staff report (see staff report in packet for full details). He noted that state representatives suggest that any new stabilization take a more natural approach.

Chair Johnson asked if there was any additional correspondence.

Comment had been submitted by the Friends of the Dunes and Dianna Turner said that she was available to answer questions if there were any.

Chair Johnson called for public testimony.

Chair Johnson stated that the pertinent criteria were listed in the staff report and criteria sheets next to the west door; testimony, arguments and evidence must be directed toward those criteria; failure to raise an issue accompanied by statements or evidence sufficient to afford the decision maker and the parties an opportunity to respond to the issue precludes appeal based on that issue; prior to the conclusion of the initial evidentiary hearing, any participant may request an opportunity to present additional testimony, arguments or evidence regarding the application. The Planning Commission shall grant such requests by continuing the public hearing or leaving the record open for additional written testimony, arguments or evidence; persons who testify shall first receive recognition from the Chair, state their full name and mailing address, and if appearing in a representative capacity, identify whom they represent.

Chair Johnson asked if the applicant wished to make a presentation.

Mike Morgan, PO box 132 Cannon Beach. Morgan stated that he is the planning consultant for the LBC Trust. He spoke to his qualifications. Has been a planner in Cannon Beach for approximately 48 years. He has had a lot of experience with dune issues. He is also a licensed nurseryman and has planted extensively with willow and beach grasses. He is not an engineering geologist; he is a planner. Mike McEwan is an engineer and a contractor with many years of experience in Cannon Beach. Morgan noted that McEwan would be doing the cobble berm. He said that he appreciates the staff recommendation for approval. He read the Friends of the Dunes letter and thinks he can address most of their concerns. Morgan said that anyone who has walked the beach in the last 6 months to a year can see the damage that the king tides have done. It is clear that people are going to start losing structures and their yards. He noted that most of Tolovana is protected by riprap. The properties between the riprap are the ones that are getting hammered. Morgan noted that the use of the cobbles has been recommended by groups such as the Oregon Coast Alliance. The two applicants tonight are willing to try the cobble berm rather than riprap, because it is a more natural approach. He noted that they had success with willows on a nearby property and that there are no plans to import sand. What is excavated for the berm will be replaced over the berm. He also noted that this is the time of the year that willow stakes will propagate most readily. He said that the jute netting will stabilize the area while the willows are given a chance to establish themselves. Morgan said that they will use signage to discourage people from sliding down the dune or otherwise furthering erosion. In relation to the Friends of the Dunes comment he thought there would be room to tighten up standards but did not think an expensive study or engineer would be needed. He said that to perform the work they would enter the beach from the Tolovana wayside. Morgan finished by stating that he thought they had met all of the applicable criteria.

Chair Johnson called for proponents of the request. There were none.

Chair Johnson called for opponents of the request. There were none.

Chair Johnson asked for further comments from staff.

Staff recommended approval based on the conditions of approval provided in the staff report. Adams added that any signed would need to be approved.

Morgan said that was ok.

Chair Johnson closed the hearing and moved to consideration.

Newton said that he would like to see more detail around criteria 4. He would also like to see how things are moving along the shoreline in general. He would like to see aerial photos, maybe a drone could be used. Newton thought it would be helpful to see data on how things are progressing to help with future conversations and decisions.

Adams said that is a great idea. He noted that the City has recently acquired a drone for emergency management that could be used.

Newton asked about the City's role once work begins.

Adams said they get notified from the State for the drive on permit. He said that usually he or Trevor goes on site when they begin work.

Newton said that was great. He thought it would be good to have someone to be out to verify that what is being proposed is what is being used, such as 50 square feet of cobble.

Kerr suggested that that monitoring by the City be included as a condition.

Newton asked how long this project would take.

Morgan said it took a day to place the cobbles and another 1-2 days to spread the jute and plant the willows.

Adams said that Kerr could amend the motion to add onsite monitoring by staff.

Motion: Newton moved to approve the request with the conditions in the staff report and the additional condition that staff be on site to monitor the work; Kerr seconded the motion.

Knop asked if this would include technology monitoring on an annual basis.

Adams said he hoped the City could do annual runs of the beach to see if these projects are achieving their goals, but that would not be a condition of this permit.

Vote: Kerr, Newton, Knop, Moritz, Bennett and Chair Johnson voted AYE; the motion passed

Johnson stated the project is approved.

(8) Public Hearing and Consideration of CU# 21-05, Martin and Maxine Siegel Living Trust request, for a Conditional Use Permit for shoreline stabilization at 3915 Ocean Ave.

Mike Morgan, on behalf of the Martin and Maxine Siegel Living Trust, request for a Conditional Use permit for shoreline stabilization. The property is located at 3915 Ocean Ave. (Tax Lot 00400, Map 41006BC) in Residential Moderate Density (R1) and Oceanfront Management Overlay (OM) Zone.

The request will be reviewed under Cannon Beach Municipal Code 17.10.030 Conditional Uses Permitted, 17.42.060 Specific Standards and 17.80.230 & 360 Shoreline Stabilization & Preservation Grading.

No one objected to the jurisdiction of the Planning Commission to hear this matter at this time. Chair Johnson asked if any Commissioner had any conflict of interest. There were none. Chair Johnson asked if any Commissioner had personal bias to declare. There were none. Chair Johnson asked if any commissioner had any ex parte contacts to declare. There were none. The commissioners declared their site visits.

St. Clair read the staff report (see staff report in packet for full details).

Chair Johnson asked if there was any additional correspondence. There was none.

Chair Johnson called for public testimony.

Chair Johnson stated that the pertinent criteria were listed in the staff report and criteria sheets next to the west door; testimony, arguments and evidence must be directed toward those criteria; failure to raise an issue accompanied by statements or evidence sufficient to afford the decision maker and the parties an opportunity to respond to the issue precludes appeal based on that issue; prior to the conclusion of the initial evidentiary hearing, any participant may request an opportunity to present additional testimony, arguments or evidence regarding the application. The Planning Commission shall grant such requests by continuing the public hearing or leaving the record open for additional written testimony, arguments or evidence; persons who testify shall first receive recognition from the Chair, state their full name and mailing address, and if appearing in a representative capacity, identify whom they represent.

Chair Johnson asked if the applicant wished to make a presentation.

Mike Morgan spoke as a representative for the owners. Morgan reiterated St. Clair's point that when the house was built in '07 the contractor installed 50 cubic yards of imported beach sand. He then wrapped it in netting and planted beach grass. That has since washed away. Morgan agreed that it was a good idea to use a drone to document erosion on an annual basis. He noted that during the king tides a large chunk of land was taken out near the City steps. He said that this stabilization would protect these steps as well. Morgan said that they would like to bring in sand and pack it in behind the berm to get the willows going. He said that Mike McEwan will be the contractor in this case as well.

Mimi and Marty Siegel thanked the Planning Commission for entertaining their request. Mimi said that they thought their approach was environmentally appropriate and noted that it is supported by the neighbors.

Chair Johnson called for proponents of the request. There was none.

Chair Johnson called for opponents of the request. There were none.

Chair Johnson asked for further comments from the staff.

Staff recommended approval based on the conditions in the staff report. Adams added onsite staff monitoring as a condition, as was suggested in the previous application.

Newton asked Morgan if the property adjacent had rip rap.

Morgan said that it does.

Newton asked if the willows being used were the same as on that property.

Morgan said that it was.

Moritz asked about the material behind the berm.

Morgan confirmed that it would be imported sand. He said that technically this is a repair of something that was done in '07.

Adams noted that commissioner Patrick had joined the meeting.

Chair Johnson closed the hearing and moved to consideration.

Newton asked if anyone had any comments.

Patrick said that she went by the site, and she thought they should approve it.

Motion: Newton moved to approve the request with the conditions in the staff report and a condition requiring staff oversight during work; Knop seconded the motion.

Vote: Kerr, Newton, Knop, Moritz, Patrick, Bennett and Chair Johnson voted AYE; the motion passed

Johnson stated the project is approved.

(9) Continuation and Consideration of SR# 21-06, David Vonada request, on behalf of John Henry, for a Setback Reduction of the rear-yard setback requirement for a deck-stairs in conjunction with an addition to an existing residence.

David Vonada, on behalf of John Henry, application to allow a setback reduction to reduce the rear yard setback from the required 15'0" to 11'6" to build a new exit stair onto a reconstructed second floor deck, according to chapter 17.14 Residential Medium Density Zone of the Municipal Code. The property is located at 1688 S. Hemlock St. (Tax Lot 04103, Map 51030DA), and in a Residential Medium Density (R2) zone. The request will be reviewed against the Municipal Code, Section 17.64.010, Setback Reduction, Provisions established.

No one objected to the jurisdiction of the Planning Commission to hear this matter at this time. Chair Johnson asked if any Commissioner had any conflict of interest. There were none. Chair Johnson asked if any Commissioner had personal bias to declare. There were none. Chair Johnson asked if any commissioner had any ex parte contacts to declare. There were none. The commissioners declared their site visits.

Adams read the staff report (see staff report in packet for full details). Adams noted that this has been continued and that the commission had asked for more information. Mr. Vonada responded to that request and that response is in the packet. Adams noted that Mr. Vonada is also on the zoom meeting.

Chair Johnson asked if there was any additional correspondence. There was none.

Chair Johnson called for public testimony.

Chair Johnson stated that the pertinent criteria were listed in the staff report and criteria sheets next to the west door; testimony, arguments and evidence must be directed toward those criteria; failure to raise an issue accompanied by statements or evidence sufficient to afford the decision maker and the parties an opportunity to respond to the issue precludes appeal based on that issue; prior to the conclusion of the initial evidentiary hearing, any participant may request an opportunity to present additional testimony, arguments or evidence regarding the application. The Planning Commission shall grant such requests by continuing the public hearing or leaving the record open for additional written testimony, arguments or evidence; persons who testify shall first receive recognition from the Chair, state their full name and mailing address, and if appearing in a representative capacity, identify whom they represent.

Chair Johnson asked if the applicant wished to make a presentation.

David Vonada of Tolovana Architects introduced himself and said that he is representing the Henry family in this issue. Vonada thanked the PC for the continuance. He noted that the PC had asked for alternatives. He said that he believes that his testimony and drawings show that the proposed stairway is the most reasonable option. Vonada said that this project started out as an enhanced access to Forest Lawn, but as he worked on the project it became clear to him that this was also an issue of safety. Vonada said that the house is already built to the 5-foot side yard setbacks so any alternative to the stair would still need a setback reduction. They are asking for a setback on the side of the house with the largest setback from the property line. He said that he felt the location where they have the stair is the most reasonable solution. He also noticed that the Forest Lawn right of way has shifted to the left so the perceived setback is greater than the required 15-foot setback. He did not think that portable ladders were a reasonable alternative.

Chair Johnson said that he was thinking that if they took a portion of the deck out and brought the stairs straight down, they would not need to ask for a setback. He also thought they could expand the deck in other areas.

Vonada said he did not see how that could be done and leave a portion of usable deck. He noted that the living room is angled which would still cause the stair to project into the required rear yard.

Moritz asked how big the deck is and how big it would need to be reduced to keep the stairs within the required setback.

Vonada said that it is about 8' x 10' now. He said that in order to meet the setback the stair would need to be angled and would reduce the deck to about 6 feet. He said that the deck would end up being a trapezoid of about 5 by 6 by 8.

Chair Johnson called for proponents of the request. There were none.

Chair Johnson called for opponents of the request. There were none.

No further response from staff.

Chair Johnson asked if the applicant wished to make additional statements.

Vonada said he did not identify any alternatives in the application because he did not consider any of them to be reasonable.

Kerr asked if there was support from the neighbors.

There was comment in support by the neighbors.

Patrick said she thought the request was reasonable for safety reasons.

Motion: Patrick moved to approve the request; Bennett seconded the motion.

Vote: Kerr, Newton, Knop, Moritz, Patrick, and Bennett voted AYE; Chair Johnson voted NAY; the motion passed

Johnson stated the project is approved.

Authorization to Sign the Appropriate Orders

Motion: Kerr moved to authorize the Chair to sign the appropriate orders; Patrick seconded the motion.

Vote: Kerr, Newton, Knop, Moritz, Patrick, Bennett and Chair Johnson voted AYE; the motion passed

INFORMATIONAL ITEMS

(10) Tree Report
No comments.

(11) Ongoing Planning Items
Adams spoke about planning priorities. He reminded people that the Feb 3rd TSP open house is at 6pm and will cover preferred alternatives. He said that the report will likely be posted tomorrow.

Adam spoke about the Code Audit. He reported that City Council passed getting rid of planned development and combining lots, but they tabled the other issues. Those issues should come back the first

of March. Hopefully those dates will be out next week. That will be a joint meeting between DRB, PC and CC.

(12) Good of the Order

Kerr asked about the pot shop at 279 N Hemlock. She wanted to know how much of the lot is covered by impervious materials.

Adams said he did not know off the top of his head. Adams said that 10% has to be softscape.

Patrick asked if a decision the Planning Commission made caused this to happen.

Adams said no. He said that that is due to Design Review Board code.

Patrick asked about another property and if it could be covered by blacktop.

Adams said that it will be required to have 10% softscape as well.

They discussed being able to change this standard in the Code Audit. Adams noted that he and the DRB would like to see the 10% increased.

Adams thanked Patrick for her service (it was her last meeting as her term was coming to an end) and hoped she would stay engaged with the Code Audit.

The Commissioners thanked Patrick for her time serving on the PC.

Patrick asked about parking.

Adams said that will be part of the Transportation System Plan meeting in February. He said that he expects parking to be a top priority as the TSP continues.

Patrick said that she has noticed that there were boulders around the City that have been placed where parking could be. She said she would be interested in serving on the DRB.

Adams said he would send her the application.

Newton thought maybe the City could talk to the state about what they require for credentials for dune or similar work.

Adams said that they need to look at thresholds at when certain things and reports are required. He said CREST is also a good resource to ask.

Kerr asked for follow-up on view ordinances and view corridors.

Adams said that he forwarded it to the code audit consultants to look at.

Adams noted that the Georgia Bulldogs won the championship. Go Dogs!!!!

ADJOURNMENT

The meeting adjourned at 7:52 pm.

_____

Administrative Assistant, Katie Hillenhagen

Katie Hillenhagen

From: Jeff Harrison <jshpub1@gmail.com>
Sent: Thursday, January 27, 2022 4:44 PM
To: Planning Group; Jeffrey Adams; Katie Hillenhagen
Cc: Greg Hathaway
Subject: Statement in lieu of oral tonight at Planning Commission - AA #21-01

I apologize this written statement is not submitted before noon. I had planned to speak tonight but am unable to do so. Please provide this to the Comissioners prior to the hearing for AA #21-01 tonight
Jeff

Dear Mr. Chair and Cannon Beach Planning Commissioners,

We are sorry we are unable to attend the conclusion of AA #21-01 but my wife's health must come first today. I know you all understand. We hope you will accept this in lieu of our planned oral statement for tonight.

We hope you have read and agree with attorney Hathaway's proposed condition. We don't believe it will harm Mr. Najimi but also feel there should be no more margin for failings here. We believe extra diligence is needed. Please do not approve a building permit until the existing garage is completely demolished and cleaned up. This will ensure there is no zoning violation.

We feel this is a good time to refresh the Commission and staff that the Nicholson PUD is not a regular subdivision and can never be treated as such. This is a "planned unit development". Therefore, additional code and conditions must be followed in order to avoid additional zoning violations.

A good example of how this Planned Unit Development differs from a regular subdivision can be found in the Shared Access and Maintenance Agreement. This agreement was required by PUD Approval Condition #2 and dictates approved uses and activities for the required "Common/Shared Outdoor Living Spaces" identified on the PUD. The proposed deck that Mr. Najimi is proposing to build in the required rear yard to the west of Lot 1 in one of these common/shared outdoor living spaces. This means that the deck, although on the Najimi's lot, is available for use by all of the PUD owners. It cannot be exclusionary for use only by the owners of Lot 1 and must remain available for all to enjoy as they wish. The same goes for all other such spaces on all of the lots in the PUD.

We believe there will be other examples of how this common/shared outdoor living space cannot be considered private or exclusionary. While the PUD owners may at some point modify the SAMA, the areas designated as common/shared outdoor living areas, available to all owners, cannot be changed without future zoning violations and would place the PUD out of compliance. We bring it up now in hopes of avoiding such foreseeable issues in the future.

Last, we wanted to remind the Commission that Nicholson promised, and Council approved, "a cottage" to be built on this lot. At 3,745 sq ft, we are a long way from a cottage or even a building that is, "generally small in scale and appropriate to its setting".

Thank you for your attention to this issue and thank you for your service to Cannon Beach.

Jeff and Jennifer Harrison
539 N Laurel
PO Box 742

CANNON BEACH COMMUNITY DEVELOPMENT
163 E. GOWER ST.
PO BOX 368
CANNON BEACH, OR 97110

Cannon Beach Planning Commission

Staff Report:

PUBLIC HEARING AND CONSIDERATION OF **CU 21-03**, JACQUELINE O. BROWN REVOCABLE TRUST, APPLICATION, REQUESTS THE INSTALLATION OF A SHORELINE STABILIZATION STRUCTURE AND SAND FILL FOR THE PURPOSE OF EROSION CONTROL. THE PROPERTY IS LOCATED AT 116 N. LAUREL STREET. (TAXLOT# 51019DD04000) AND IS IN THE RESIDENTIAL MEDIUM DENSITY (R2) ZONING DISTRICT. IT IS ALSO IN THE OCEANFRONT MANAGEMENT OVERLAY (OM) ZONE. THE REQUEST WILL BE REVIEWED UNDER CANNON BEACH MUNICIPAL CODE, SECTIONS 17.80.110 AND 17.80.230, SHORELINE STABILIZATION, PROVISIONS ESTABLISHED.

Agenda Date: February 24, 2022 **Prepared By**: Robert St. Clair

GENERAL INFORMATION

NOTICE

Public notice for this January 27, 2022 Public Hearing is as follows:

A. Notice was posted at area Post Offices on January 5, 2022;

B. Notice was mailed on January 5, 2022 to surrounding landowners within 100' of the exterior boundaries of the property.

DISCLOSURES

Any disclosures (i.e. conflicts of interest, site visits or ex parte communications)?

EXHIBITS

The following Exhibits are attached hereto as referenced. All application documents were received at the Cannon Beach Community Development office on November 23, 2021 unless otherwise noted.

"A" Exhibits – Application Materials

A-1 Shoreline stabilization application #21-03, stamped Received November 23, 2021;

A-2 Photographs showing site conditions and location of proposed stabilization project;

"B" Exhibits – Agency Comments

B-1 November 16, 2021 email from Eric Crum of Oregon Parks and Recreation Department regarding state requirements for the shoreline stabilization improvement project at 116 N. Laurel St.

"C" Exhibits – Cannon Beach Supplements

C-1 None as of this writing;

"D" Exhibits – Public Comment

None received as of this writing;

SUMMARY & BACKGROUND

The applicant, Jacqueline O. Brown Revocable Trust, requests a shoreline stabilization to prevent erosion from encroaching onto 116 N. Laurel St, as shown on the aerial photograph at the end of this staff report. The property is in the City's Residential Medium Density (R2) zone as well as the Oceanfront Management Overlay (OM) zone. The current request is evaluated against applicable standards in Cannon Beach Municipal Code (CBMC) chapter 17.42.060 Standards for shoreline stabilization structures in the Oceanfront Management Overlay (OM) zone; the conditional use permit criteria in CBMC 17.80; and applicable requirements of the Comprehensive Plan.

The applicant states that there has been significant erosion into the landscaped lawn area that has occurred over the past two years due to king tides and storm surge events. Properties to the north of 116 N. Laurel are protected by seawalls and rip rap extending from Second St. toward Ecola Creek, properties to the south are described as being generally intact unplanted sand dunes at the present.

The proposed non-structural shoreline stabilization is the replacement of sand that has eroded from the west side of the subject property and use of natural jute or coir material to stabilize it. The sand would then be planted with native willows and a mixture of European and American beach grass.

Installation of shoreline stabilization structures in the Oceanfront Management Overlay Zone is permitted under CMBC 17.42.030.C.1 subject to the provisions of 17.80.230. Approval requirements are excerpted in this staff report.

Applicable Criteria

The Cannon Beach Municipal Code (CBMC) requires all shoreline stabilization structures apply for a conditional use permit in the R2 and Oceanfront Management zoning districts that make up the subject property.

Cannon Beach Municipal Code defines shoreline stabilizations structures as:

17.04.520 Shoreland stabilization.
"Shoreland stabilization" means the protection of the banks of tidal or inter-tidal streams, rivers, estuarine waters and the oceanfront by vegetative or structural means.

Oceanfront Management Zone Uses and Permitted Activities

17.42.020.A.2.B *Relationship to the Underlying Zone. Uses and activities within the OM zone are subject to the provisions and standards of the underlying zone and this chapter. Where the provisions of this zone and the underlying zone conflict, the provisions of this zone shall apply.*

Staff Comment: The underlying zone is Residential Medium Density (R2) and a structural shoreline stabilization such as rip-rap, bulkheads, or a sea wall is defined as a conditionally permitted use in 17.14.030.D. Meets criteria.

17.42.030.C Uses Permitted in the OM Zone

C. For lots or right-of-way that consist of the beach, active dunes, or other foredunes which are conditionally stable and that are subject to wave overtopping or ocean undercutting, or interdune areas that are

subject to ocean flooding the following uses and activities are subject to the provision of Chapter 17.80, Conditional Uses:

1. Shoreline stabilization, subject to the provisions of Section 17.80.230;

2. Nonstructural shoreline stabilization program, subject to the provisions of Section 17.42.060(A)(5);

3. Preservation grading, subject to the provisions of Section 17.42.060(A)(3);

4. Remedial dune grading, subject to the provisions of Section 17.42.060(A)(4).

5. A new road, driveway approach, or other access that has fifty feet or more of linear length in OM Zone right-of-way, or in right-of-way within one hundred feet of a stream, watercourse or wetland. Access is new if vehicular access did not previously exist at the location, it was blocked for a period of one year, or an unimproved right-of-way would be improved to provide vehicular access. Alteration of an existing access is not new access.

Staff Comment: Conditional approval of shoreline stabilization is permitted on lots that consist of beach, active dunes, or other foredunes which are conditionally stable and that are subject to wave overtopping or ocean undercutting, or interdune areas that are subject to ocean flooding. The property is subject to tidal events such as king tides and storm surges that are undercutting the existing foredune and causing rapid erosion of the subject property and an immediately adjacent public beach access. The applicant provides a description of approximately 50 cubic-yards of sand fill material being transported to the site by truck and placed with an excavator. The applicant states that a beach access permit will be obtained for this purpose. Meets criteria upon conditions of approval #2 and #3.

17.42.060.A.5 Nonstructural Shoreline Stabilization

5. *Nonstructural Shoreline Stabilization Program.*
   - A. *The program is prepared by a qualified individual approved by the city. The program shall be based on an analysis of the area subject to accretion and/or erosion. The area selected for management shall be found, based on the analysis, to be of sufficient size to successfully achieve the program objectives.*
   - B. *The program shall include specifications on how identified activities are to be undertaken. The specifications should address such elements as: the proposed type of vegetation to be planted or removed; the distribution, required fertilization and maintenance of vegetation to be planted; the location of any sand fences; and the timing of the elements of the proposed program.*
   - C. *Fire-resistant species are the preferred stabilizing vegetation within twenty-five feet of existing dwellings or structures. Fire-resistant vegetation should only be planted when the foreslope and crest of the dune are adequately stabilized to prevent significant accumulation of windblown sand.*
   - D. *Where the placement of sand fences is proposed, evidence shall be provided that the planting of vegetation alone will not achieve the stated purpose. Fencing may be permitted on a temporary basis to protect vegetation that is being planted as part of the program, or to control the effects of pedestrian beach access on adjacent areas.*
   - E. *The affected property owners shall establish a mechanism that provides for the on-going management of the proposed program.*
   - F. *The impact of the program shall be monitored. For multiyear programs, an annual report detailing the effects of the program during the previous year shall be presented to the planning commission. The report shall include recommendations for program modification. For a one-year program, a final report detailing the effects of the program shall be presented to the planning commission.*
   - G. *Areas that accrete as the result of a stabilization program will not form the basis for reestablishing the location of the building line specified by Section 17.42.050(B)(3).*

Staff Comment: The proposed stabilization project is designed to be an alternative to the structural placement of rip-rap or other constructed barrier and will be covered with sand fill material that will have planted vegetation to provide surface cover and provide additional stability. The 'qualified individual' as outlined by the criteria does not give suggested qualifications or criteria for such a determination. There is no indication whether sand will be graded or if there will be fill necessary to establish the vegetation. If over fifty cubic yards are to be moved, the preservation grading standards, CBMC 17.42.060(A)3, copied below, should be considered in review. The application proposes jute material in efforts to establish vegetation, rather than fencing. The site should be monitored yearly by the applicant and provided to the City as documentation as a condition of approval. The proposed design is consistent with surrounding conditions and is intended to restore the foredune to a more natural appearing state. Meets criteria upon condition of approval #2.

Conditional Uses for Shoreline Stabilization

17.80.110 Conditional Use Approval Standards

Before a conditional use is approved, findings will be made that the use will comply with the following standards:

A. *A demand exists for the use at the proposed location. Several factors which should be considered in determining whether or not this demand exists include: accessibility for users (such as customers and employees), availability of similar existing uses, availability of other appropriately zoned sites, particularly those not requiring conditional use approval, and the desirability of other suitably zoned sites for the use.*
B. *The use will not create excessive traffic congestion on nearby streets or overburden the following public facilities and services: water, sewer, storm drainage, electrical service, fire protection and schools.*
C. *The site has an adequate amount of space for any yards, buildings, drives, parking, loading and unloading areas, storage facilities, utilities or other facilities which are required by city ordinances or desired by the applicant.*
D. *The topography, soils and other physical characteristics of the site are appropriate for the use. Potential problems due to weak foundation soils will be eliminated or reduced to the extent necessary for avoiding hazardous situations.*
E. *An adequate site layout will be used for transportation activities. Consideration should be given to the suitability of any access points, on-site drives, parking, loading and unloading areas, refuse collection and disposal points, sidewalks, bike paths or other transportation facilities required by city ordinances or desired by the applicant. Suitability, in part, should be determined by the potential impact of these facilities on safety, traffic flow and control and emergency vehicle movements.*
F. *The site and building design ensure that the use will be compatible with the surrounding area.*

Staff Comment: The application indicates that the project is necessary to counter the rate of erosion being seen at the subject property and restore material that has been removed by tidal and storm surge events, the project will also allow for the property to be restored to a visual appearance similar to that of adjacent properties. The application does not describe where trucks and other equipment will access the project site, only that a beach access permit will be obtained prior to commencing work. Meets criteria.

17.80.230.C Shoreline Stabilization Standards

The city's review of beachfront protective structures, both landward and seaward of the Oregon Coordinate Line, shall be coordinated with the Oregon Parks and Recreation Department. The city's review of shoreline stabilization along Ecola Creek Estuary shall be coordinated with the U.S. Army Corps of Engineers and the Oregon Division of State Lands.

Staff Comment: Due to the project's location on the border of the state vegetation line, the project will require coordination with the Oregon Parks and Recreation Department. The application states that this permit will be obtained prior to commencement of work. State requirements, as found in Exhibit B-1, include the following:

- Allowance to place up to 50 cubic yards of natural material on the ocean shore through a free drive on the beach permit. Natural materials are defined as driftwood, clean sand, and river cobbles four to eight inches in size. Any imported sand must be clean and free from any contaminant or seed. Cobble cannot be quarried or angular rock and must match, as closely as possible, naturally occurring cobble present at the work site location.
- Any proposed dynamic revetment such jute matting or planting, using more than 50 cubic yards of sand, or building a cobble revetment project using more than 50 cubic yards of material requires the approval of a Shoreline Alteration Permit from Oregon Parks and Recreation Department.

The application does not describe the source of sand to be used as fill in the project. Any grading done to generate fill material shall be subject to condition three detailed in the conditions of approval.

The project will meet criteria so long as the volume of new material being placed does not exceed 50 cubic yards. If the project proposes to exceed 50 cubic yards they would be required to coordinate with the State and the preservation grading criteria of section CBMC 17.42.060(A)3, Preservation Grading, copied below, would apply.

17.80.230.D.1 Shoreline stabilization priorities

1. *The priorities for shoreline stabilization for erosion control are, from highest to lowest:*
   a. *Proper maintenance of existing riparian vegetation;*
   b. *Planting of riparian vegetation;*
   c. *Vegetated rip-rap;*
   d. *Nonvegetated rip-rap;*
   e. *Bulkhead or seawall.*

Staff Comment: The applicant's proposal is described as the replacement of approximately 50 cubic yards of sand which will be supported by natural jute or coir material and planted vegetation consisting of natural willows and European and American beach grasses. Meets criteria.

17.80.230.E.1 Qualifications for Beachfront Protection

1. *Structural shoreline stabilization methods for beachfront protection shall be permitted only if:*
   a. *There is a critical need to protect property that is threatened by erosion hazard;*
   b. *Impacts on adjacent property are minimized;*
   c. *Visual impacts are minimized;*
   d. *Access to the beach is maintained;*
   e. *Long-term or recurring costs to the public are avoided; and*
   f. *Riparian vegetation is preserved as much as possible.*

Staff Comment: Although no statement from an engineer has been provided, application materials indicate that structures on the property may be threatened in the near future if the rate of erosion continues unchecked. The project would allow for the dune to be returned to a more natural state, visually consistent with surrounding properties. There should be no impacts to beach access or recurring costs to the public, and the proposed planting of willows and beach grasses, if allowed to establish, should provide stability to the eroding dunes. Meets criteria upon condition of approval #2.

17.80.230.I Minimum Level of Protection Limitation

The shoreline protection structure shall be the minimum necessary to provide the level of protection required.

Staff Comment: The project as described does not appear to exceed the original footprint of the beach facing yard and adjacent natural dunes. Meets criteria.

Staff Recommendation

Staff recommends approval of this Conditional Use Permit for nonstructural shoreline stabilization subject to the conditions outlined in the decision below.

Procedural Requirements

This application is subject to ORS 227.178, requiring the City to take final action within 120 days after the application is deemed complete. It was submitted December 2, 2021; and determined to be complete on December 2, 2021. Based on this, the City must make a final decision before March 22, 2022.

The Planning Commission's January 27th meeting will be the first evidentiary hearing on this revised request. ORS 197.763(6) allows any party to request a continuance. If such a request is made, it should be granted. The Planning Commission's next regularly scheduled hearing date is February 24, 2022.

DECISION, CONDITIONS AND FINDINGS

Motion: Having considered the evidence in the record, upon motion by Commissioner _____, second by Commissioner _____, and by a vote of ___ to ____, the Cannon Beach Planning Commission hereby (approves/approves with conditions/or denies) the conditional use request for the construction of a structural shoreline stabilization of CU# 21-03 as discussed at this public meeting (subject to the following conditions) and approves the drafting of findings for Commission consideration and adoption at its next scheduled meeting of February 24, 2022:

1. The applicant shall coordinate this project with Oregon Parks and Recreation Department and obtain all permits required for this work including beach access for vehicles.

2. Planning Commission provides preferred vegetation planting guidance as per Foredune Management Plan 2018 revision Vegetation Planting Specifications language (pg. 18).

3. Any preservation grading shall be subject to the following conditions:

   - Areas of sand removal covered under this permit are ocean front and side yards within 35 feet of the foundation of the structure and an area of no more than 12 feet in width west of the established fence line west of the established fence line west of the structure to allow use of heavy equipment for sand removal.

   - Sand removed from this area to be placed back in the sand/beach system in the areas indicated on the attached map. The intent of this requirement is to place sand over the edge of the sand bluff onto the tide washed area of the beach.

   - Sands which are mixed with soils, gravel or non-beach vegetation are to be removed from the area and disposed of off-site.

- Moving of sand to the placement area shall take place along routes between the sand/grass mounds indicated. Routes of travel should be in a manner which does not damage existing beach grass or disturb areas west of the 12-foot removal area.

- Before any work is performed with power equipment in the above area the City shall be given at least 48-hours notice prior to commencing work. Any vehicle access permits for operation west of the zone line shall be obtained.

- When hand or manual removal of more than 5 yards is to take place the City shall be given at least 48-hours notice prior to commencing work and City will have on-site representation for monitoring activities.

4. Yearly monitoring of the area, by photographic documentation, provided to the City by the applicant.

Preservation Grading Specific Standards, if applicable

CBMC 17.42.060(A)3. Preservation Grading. Grading or sand movement necessary to repair blow-outs, erosion or maintain public access or facilities, which may be allowed in active dune areas only if the area is committed to development and meeting the requirements of Comprehensive Plan Foredune Management Policy. Preservation Grading does not include grading necessary for the repair, maintenance or installation of stormwater outfalls or facilities, including infiltration and water quality systems. Preservation Grading Conditional Use Permit requests for preservation grading shall include the following information:

a. Specify minimum dune height and width requirements to be maintained for protection from flooding and erosion. The minimum height for flood protection is four feet above the one-hundred year flood elevation established in the "The Flood Insurance Study for Clatsop County, Oregon and Incorporated Areas," dated June 20, 2018; plus an additional one vertical foot safety buffer for predicted sea level rise. The minimal cross-section area that must be maintained is one thousand one hundred square feet of dune above the stillwater flood elevation.
b. Identify and set priorities for low and narrow dune areas which need to be built up.
c. Prescribe standards for redistribution of sand and temporary and permanent stabilization measures including the timing of these activities. Placement of sand on the beach may be permitted as part of a foredune grading permit if sand deposition does not exceed a depth of twelve centimeters. Placement of sand along the seaward face of the dune may be permitted as part of a foredune grading plan if the resulting slope is no steeper than twenty-five to thirty-three percent.
d. The cumulative volume of proposed grading.
e. Preservation grading plans shall be submitted to the soil and water district for their comments and any necessary permits shall be obtained from the Oregon State Parks and Recreation.
f. A monitoring plan. Monitoring is mandatory, and the responsibility of the permit holder. Annual monitoring reports are required for the first and second years following grading activities, and may be requested by the planning commission for subsequent years. Monitoring reports shall include:

   I. The area, volume, and location of grading;

   II. The area(s) where graded sand was deposited;

   III. Erosion control measures;

   IV. Revegetation measures;

   V. Impacts on wildlife habitat, including razor clam habitat;

   VI. Any other requirements of the approved grading plan; and

   VII. Any conditions of approval imposed by the planning commission.

The city shall retain the services of independent outside experts, at the expense of the permit holder, to review monitoring report and to make recommendations to the city for corrective actions or for future grading, disposition, and revegetation activities. The monitoring report may be included in the review, if conducted by an agreed upon outside expert, at the expense of the permit holder and contracted by the city. Failure to submit the required monitoring reports will result in a penalty and will prevent future grading permits to be issued for the area for a period of five years beginning after the monitoring reports are brought up to date.

g. Permits for preservation grading shall not be approved unless they comply with applicable policies of the Comprehensive Plan, including Sand Dune Construction and Foredune Management Policies.
h. Permits for preservation grading may be approved if the Planning Commission finds all of the following criteria have been met:

I. The proposal achieves a balance of these four objectives:

A. To ensure the dunes sustain an adequate sand volume in order to withstand the erosional effects of (an) extreme storm(s) and to minimize any potential for wave overtopping and inundation (flooding) of backshore.
B. To strengthen weak points in the dune system (e.g., adjacent to trails), by repairing areas subject to localized blowouts from wind or waves in order to prevent the dune buffer from erosion and potentially being breached during a storm.
C. To maintain valuable habitat for a wide range of plants and animals, such as shellfish, including razor clams, and in some cases rare species.
D. To maintain the integrity and natural beauty of the dunes, while providing for the necessary functions of public access, facilities and utilities.

II. The annual cumulative volume of preservation grading does not exceed two thousand five hundred cubic yards.
III. The preservation does not remove sand form the beach-foredune system.
IV. The preservation grading sand deposition area will not impact adjoining property.

i. Revegetation of graded areas is mandatory. This can be accomplished with a combination of European Beach grass (*A. arenaria*); non-native American dune grass (*A. breviligulata*); the PNW native dune grass (*E. mollis*); or another revegetation plan approved by the planning commission. Graded areas shall be stabilized immediately after grading. Where immediate revegetation is not possible, or where revegetation fails, temporary erosion control measures shall be implemented until revegetation can be completed. Fire-resistant species are the preferred stabilizing vegetation within twenty-five feet of existing dwellings or structures, but fire-resistant vegetation shall only be planted when the foreslope and crest of the dune are adequately stabilized to prevent significant accumulation of windblown sand.
j. Maintenance activities not requiring a separate administrative permit under the approved conditional use permit may include:

I. Additional plantings or certified organic fertilizer applications in areas where plantings performed poorly.

Site Location Map

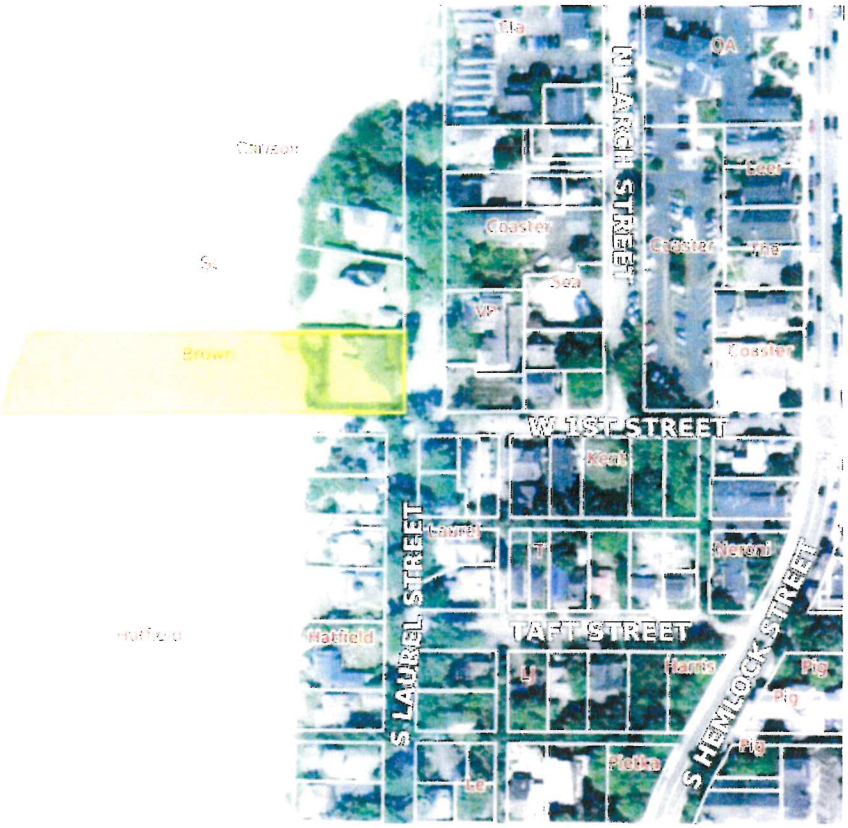

Oceanfront Management Zone Overlay and Vegetative Line

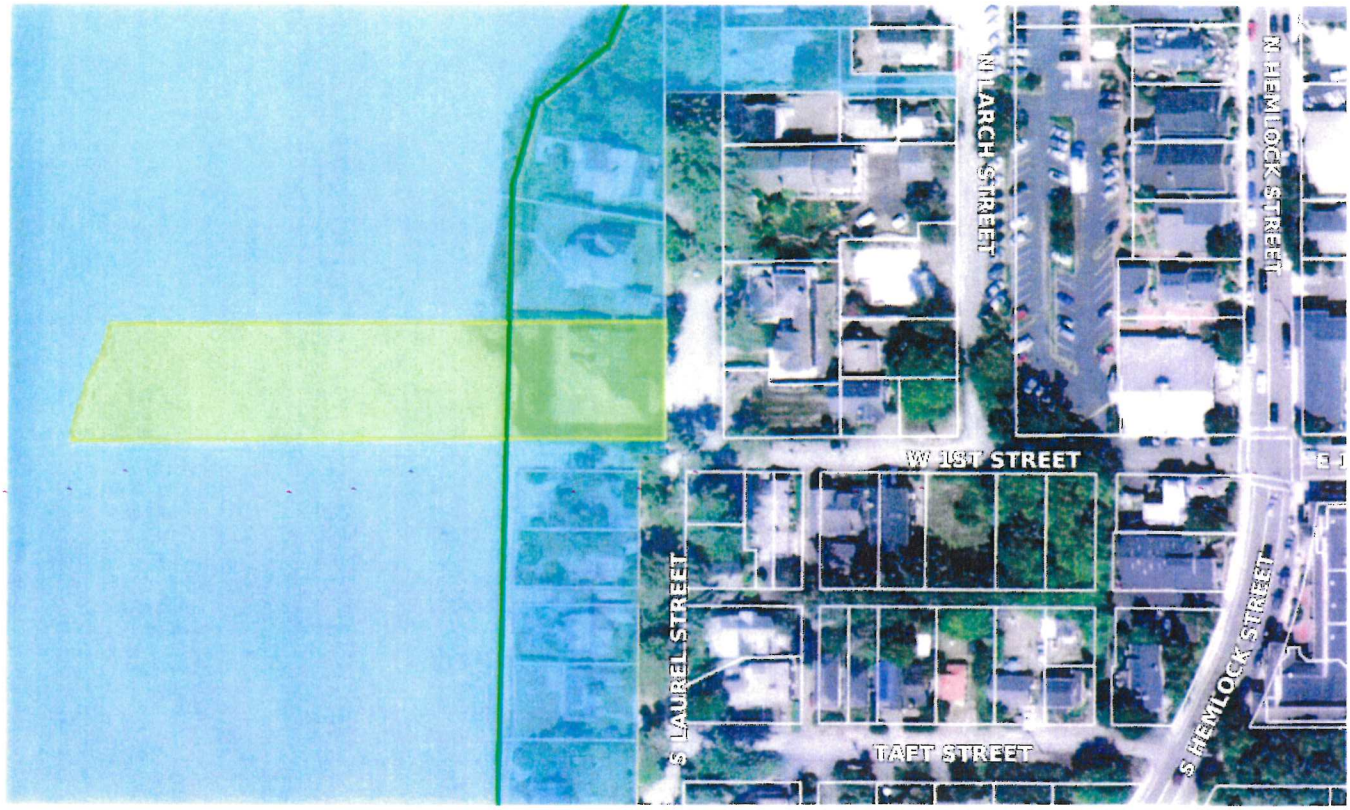

CITY OF CANNON BEACH

City of Cannon Beach
Finance Department
NOV 23 2021
Received

CONDITIONAL USE APPLICATION

Please fill out this form completely. Please type or print.

Applicant Name: Jacqueline O. Brown Revocable Trust_
Email Address: sbrown@larrybrowninc.com
Mailing Address: 2235 SW 85th St. Portland, OR 97225

Telephone: (503) 887 5846

Property-Owner Name: _____
(if other than applicant)
Mailing Address: _____
Telephone: _____
Property Location: 116 N. Laurel St.
(street address)
Map No.: ___51019DD___Tax Lot No.: _4000_____

CONDITIONAL USE REQUEST:

1. Description of the proposal. The proposal is to replace sand that has eroded the bank on the west side of the property with imported clean sand, and to stabilize the sand with natural jute or coir material. The sand would then be planted with native willows on the lower 6-7 feet and a mixture of European and American beach grass on the upper areas of the sand deposition.

2. Justification of the conditional use request. Explain how the request meets each of the following criteria for granting a conditional use.

   a. Explain how a demand exists for the use at the proposed location. Several factors which should be considered include: accessibility for users (such as customers and employees); availability of similar existing uses; availability of other appropriately zoned sites, particularly those not requiring conditional use approval; and the desirability of other suitably zoned sites for the use.

As can be seen from the attached photos, there has been significant erosion extending from the beach and State of Oregon Vegetation Line all the way up to the landscaped lawn area. This has occurred in the last two years due to king tides and storm surge events. The properties on either side of the Brown house have not experienced the level of erosion. To the south the properties along Laurel Street are still generally intact, even though they are unplanted sand dunes. The properties to the north are protected by seawalls and rip rap extending beyond Second Street toward Ecola Creek. It is estimated that fifty lineal feet have been lost in the last two or three years.

b. Explain in what way(s) the proposed use will not create traffic congestion on nearby streets or over-burden the following public facilities and services: water, sewer, storm drainage, electrical service, fire protection and schools.

There will be no impact on public facilities and services. The erosion has uncovered the storm drain line for the Brown house, which must be replaced

c. Show that the site has an adequate amount of space for any yards, buildings, drives, parking, loading and unloading areas, storage facilities, utilities, or other facilities which are required by City Ordinances or desired by the applicant.

The Brown residence has experienced a severe loss of the front yard in the last several years. Prior to the recent storm and tidal events, the Browns and the previous owners of the property erected plywood fencing on the western edge of the lawn to prevent sand inundation that would sometimes require an excavator to remove large amounts of sand and return it to the beach.

d. Show that the topography, soils, and other physical characteristics of the site are appropriate for the use. Potential problems due to weak foundation soils must be shown to be eliminated or reduced to the extent necessary for avoiding hazardous situations.

The property is flat, except for the steep eroded dune bank on the west. The house itself sits on a Marine Terrace clay formation. The house has been in existence for several decades, and has not experienced any problems other than the erosion on the ocean front. If the erosion is allowed to continue at the current rate, it will threaten not only the front yard but the foundation of the house.

e. Explain in what way an adequate site layout will be used for transportation activities. Consideration should be given to the suitability of any access points, on-site drives, parking, loading and unloading areas, refuse collection and disposal points, sidewalks, bike paths or other transportation facilities required by City ordinances or desired by the applicant. Suitability, in part, should be determined by the potential impact of these facilities on safety, traffic flow and control and emergency vehicle movements.

There will be no impact on transportation facilities. The contractor will obtain a one day drive on beach permit in order to place the sand up against the bank using an excavator. It is estimate that it will require five truckloads of clean sand to fill the void created by the erosion.

f. Explain how the proposed site and building design will be compatible with the

showing the development of the site. After you submit a completed application, accompanied by a fee to help defray the cost of processing, the City will begin processing your conditional use application.

Public Hearing - Planning Commission.

Conditional use permit requests are considered by the Cannon Beach Planning Commission at a public hearing. Hearings for conditional use permits will be held within 40 days after the application is submitted. Notice of the hearing is mailed to the applicant and to property owners with 250 feet of the site in question. Prior to public hearing, the City Planner will prepare a written report on the request. The report will contain the background of the request and a recommendation based on an investigation of the facts of the proposal and how they pertain to the criteria for granting a conditional use permit. A copy of the report will be mailed to the applicant. Anyone interested in the application may request a copy of the report. At the public hearing, the property owner desiring the conditional use permit has the burden of establishing that the requested conditional use meets the criteria in the Zoning Ordinance. Other people will be given the opportunity to speak in favor of the request, offer comments, ask questions, and/or speak in opposition. At the end of the hearing, the Planning Commission will approve, approve with conditions, or deny the conditional use request.

Appeals to the City Council.

Appeals of the Planning Commission action must be made within 20 days of the decision. The basis of the written appeal must be that the Planning Commission made an error in its decision. The applicant may ask for a new hearing before the City Council or request that the City Council review the Planning Commission record established in making its decision. The City Council may either uphold, reverse or place conditions upon the Planning Commission decision.

surrounding area.

It is the intent of the project to restore the dune to its original condition with plantings of willows and other hardy vegetation, and appear as a natural dune from the beach.

Use extra sheets, if necessary, for answering the above questions. Attach a scale-drawing showing the dimensions of the property, adjacent street(s), dimensions of existing structure, and dimensions of proposed development.

Application Fee: $750.00

Applicant Signature: _____ Date: _____

Property Owner Signature: _____ Date: _____

If the applicant is other than the owner, the owner hereby grants permission for the applicant to act on his/her behalf. Please attach the name, address, phone number, and signature of any additional property owners.

For Staff Use Only:

Date Received: _____ By: _____

Fee Paid: _____ Receipt No.: _____

(Last revised March 2021)

PAID NOV 23 PAID

CONDITIONAL USE PERMIT - GENERAL INFORMATION

What is a Conditional Use Permit?

Land use on all property in Cannon Beach is governed by zoning districts established by the City Council. Cannon Beach has two main types of zoning districts: residential and commercial. Within each of these main categories there are specific zoning districts, such as Medium Density Residential, R-2, and High Density Residential, R-3. Every zoning district has a list of permitted uses and a list of uses that are only allowed after being approved for a conditional use permit. For example, on property zoned R-2, Medium Density Residential, a single-family dwelling is allowed outright, but a church would be allowed only if approved under a conditional use permit.

The Purpose of Conditional Use Permits

Certain uses by their very nature need special consideration before they can be allowed in a particular zoning district. The reasons for requiring such special consideration involve, among other things, the size and intensity of the use, traffic generated by the use and compatibility of the use with the area. These issues are addressed through the conditional use permit process which involves a public hearing before the Planning Commission.

Application and Processing.

If the use you wish to establish on your property requires a conditional use permit, the first step is to informally discuss your proposal with the City Planner. Applications may be submitted by the property owner or an authorized agent. An application should include a detailed statement of the proposed use and a plot plan

Clatsop County Webmaps

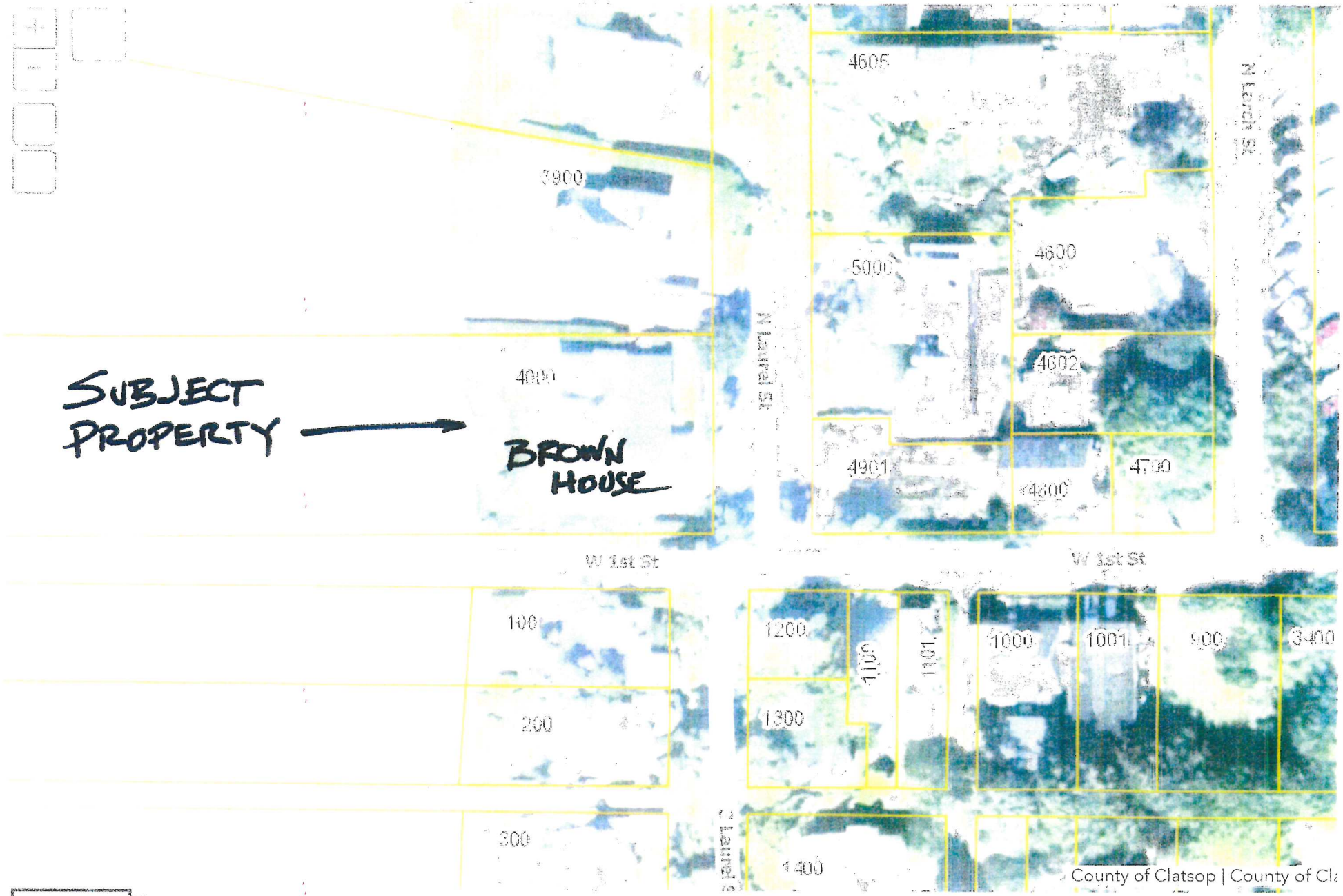

EXISTING DUNE SOUTH OF BROWN PROPERTY

BROWN PROPERTY

BROWN PROPERTY

BROWN PROPERTY

Robert St. Clair

From: Jeffrey Adams
Sent: Monday, December 13, 2021 11:11 AM
To: Robert St. Clair
Subject: FW: 116 N Laurel Street, Cannon Beach
Attachments: BPFindings.pdf

Robert,

This is the email that outlines the State's permitting requirements for shoreline stabilization. You could use this in your staff report. I found this CUP from Breakers Point that you might have a look at.

Jeff

Jeff Adams
Community Development Director
City of Cannon Beach
p: 503.436.8040 | tty: 503.436.8097 | f: 503.436.2050
a: 163 E. Gower St. | PO Box 368 | Cannon Beach, OR 97110
w: www.ci.cannon-beach.or.us | e: adams@ci.cannon-beach.or.us

DISCLOSURE NOTICE: Messages to and from this email address may be subject to Oregon Public Records Law.

From: CRUM Eric * OPRD <Eric.CRUM@oprd.oregon.gov>
Sent: Tuesday, November 16, 2021 11:03 AM
To: Mike McEwan <mmcewan3569@gmail.com>; Karen La Bonte <labonte@ci.cannon-beach.or.us>; Trevor Mount <mount@ci.cannon-beach.or.us>; Bruce St. Denis <stdenis@ci.cannon-beach.or.us>
Cc: PARKER Ryan * OPRD <Ryan.PARKER@oprd.oregon.gov>; Jeffrey Adams <adams@ci.cannon-beach.or.us>; TAYLOR Trevor * OPRD <Trevor.TAYLOR@oprd.oregon.gov>
Subject: RE: 116 N Laurel Street, Cannon Beach

Mike, Karen, Trevor, and Bruce,

Thank you for taking the time to meet with us yesterday. I'm including a brief recap here on what we discussed for the 116 N Laurel St project. I will follow-up with a subsequent email concerning the city's outflow pipes and that permit process moving forward.

We discussed a few potential options for working on the ocean shore in this location:

1. You are allowed to place up to 50 cubic yards of natural material on the Ocean Shore through a free drive on beach permit. Natural materials are defined as driftwood, clean sand, and river cobbles 4"-8" in size. If using driftwood, it cannot be structurally engineered, but simply placed on the ocean shore. Any imported sand would have to be clean and free from any contaminant or seed. The river cobble cannot be quarried rock, nor can it be angular. The cobble must match, as closely as possible, the naturally occurring cobble currently present in the location. The free Drive on Beach permit application can be found here: https://stateparks.oregon.gov/index.cfm?do=visit.dob-form

2. Any proposed dynamic revetment (i.e., jute matting and planting), using more than 50 yards of sand, or building a larger cobble revetment project using more than 50 cubic yard of material would require a complete and approved Shoreline Alteration Permit. That permit application can be found here (https://www.oregon.gov/oprd/prp/pages/per-ocean-shore.aspx) and here: (https://www.oregon.gov/oprd/PRP/Documents/PRP_PER_OS_SPS_form.pdf). There is a cost associated with this, as well as a public-comment notification period. In section 1, they would choose "Other." Please note that if the project is more than 50 feet in length, it would require a geologic report from a registered professional geologist and a completed Analysis of Hazard Avoidance. Also note that this permit requires the attached City/County Planning Department Affidavit (pg.9) to be completed and signed off/approved by the local planning official, in this case it would be from the City of Cannon Beach.
3. A permanent riprap revetment or seawall would also be obtained through the same Shoreline Alteration Permit, including the same requirements as mentioned above in number 2. A brief check of the Coastal Atlas reference map (https://www.coastalatlas.net/oceanshores/), indicates that the property is potentially eligible for a beachfront protective structure. Again, this would have to be verified and approved by the City of Cannon Beach and Clatsop County.

As we observed at the site, there are at least 2 pipes currently exposed and draining onto the ocean shore from this property. Any drainage or water outflow that occurs west of the Statutory Vegetation Line, would also have to be addressed and included in the proposed project application for the Shoreline Alteration Permits.

If you have any further question regarding this project, and these options, please feel free to reach out. My contact information is provided below.

Best,

Eric

Eric Crum [illegible]

[illegible]

www.oregonstateparks.org

From: CRUM Eric * OPRD
Sent: Wednesday, November 10, 2021 10:06 AM
To: Jeffrey Adams <adams@ci.cannon-beach.or.us>
Cc: PARKER Ryan * OPRD <Ryan.Parker@oregon.gov>
Subject: RE: 116 S Laurel Street, Cannon Beach

Okay, great. Thanks Jeff. It is 116 **NORTH** Laurel St... not south. I think Mike has it down wrong.

See you on Monday.

Eric Crum [illegible]

www.oregonstateparks.org

From: Jeffrey Adams <adams@ci.cannon-beach.or.us>
Sent: Wednesday, November 10, 2021 9:59 AM
To: CRUM Eric * OPRD <Eric.CRUM@oprd.oregon.gov>
Cc: PARKER Ryan * OPRD <Ryan.PARKER@oprd.oregon.gov>
Subject: RE: 116 S Laurel Street, Cannon Beach

Eric,

Thanks, we'll try to make the meeting, as they'll need City approval.

Jeff

Jeff Adams
Community Development Director
City of Cannon Beach
p: 503.436.8040 | tty: 503.436.8097 | f: 503.436.2050
a: 163 E. Gower St. | PO Box 368 | Cannon Beach, OR 97110
w: www.ci.cannon-beach.or.us | e: adams@ci.cannon-beach.or.us

DISCLOSURE NOTICE: Messages to and from this email address may be subject to Oregon Public Records Law.

From: CRUM Eric * OPRD <Eric.CRUM@oprd.oregon.gov>
Sent: Wednesday, November 10, 2021 9:34 AM
To: Jeffrey Adams <adams@ci.cannon-beach.or.us>
Cc: PARKER Ryan * OPRD <Ryan.PARKER@oprd.oregon.gov>
Subject: FW: 116 S Laurel Street, Cannon Beach

Good morning Jeff,

Just an FYI, we're meeting with Mike McEwan about a new project proposal this coming Monday at 116 S Laurel St. See attached. We are meeting at Noon.

I wanted to give you a heads up is all. Feel free to join if you would like. I'll keep you in the loop on anything moving forward from OPRD.

Eric

Eric Crum | [illegible]
[illegible]
[illegible]
[illegible]
[illegible]
www.oregonstateparks.org

From: Mike McEwan <mmcewan3569@gmail.com>
Sent: Monday, November 8, 2021 11:40 AM
To: CRUM Eric * OPRD <Eric.CRUM@oregon.gov>
Subject: 116 S Laurel Street, Cannon Beach

Hello Eric,

Could we set up a time to review the attached project at 116 S Laurel Street, Cannon Beach?

Michael McEwan

President

Bob McEwan Construction, Inc. CCB 48302

503.440.0223 503.738.3569

mmcewan3569@gmail.com

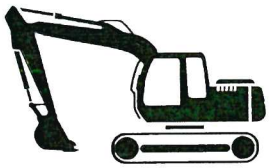

CITY OF CANNON BEACH

January 5, 2021

CU 21-03, Jacqueline O. Brown Revocable Trust request for a Conditional Use permit to replace approximately 50 cubic yards of sand that has eroded the bank on the west side of the property. The property is located at 116 N. Laurel St. (Tax Lot 04000, Map 51019DD) in a Residential Medium Density (R2) and Oceanfront Management Overlay (OM) zone. The request will be reviewed under Cannon Beach Municipal Code 17.14.030 Conditional Uses Permitted, 17.42.060 Specific Standards and 17.80.230 & 360 Shoreline Stabilization & Preservation Grading.

Dear Property Owner,

Cannon Beach Zoning Ordinance requires notification to property owners within 250 feet, measured from the exterior boundary, of any property which is the subject of the proposed applications. Your property is located within 250 feet of the above-referenced property or you are being notified as a party of record.

Please note that you may submit a statement either in writing or orally at the hearing, supporting or opposing the proposed action. Your statement should address the pertinent criteria, as stated in the hearing notice. Statements in writing must be received by the date of the hearing.

Enclosed are copies of the public hearing notice, a description of how public hearings are conducted and a map of the subject area. Should you need further information regarding the relevant Zoning Ordinance, Subdivision Ordinance or Comprehensive Plan criteria, please contact Cannon Beach City Hall at the address below, or call Katie Hillenhagen at (503) 436-8054 or email hillenhagen@ci.cannon-beach.or.us.

Sincerely,

Kathryn Hillenhagen

Katie Hillenhagen
Administrative Assistant

Enclosures: Notice of Hearing
Conduct of Public Hearings
Map of Subject Area

NOTICE OF PUBLIC HEARING
CANNON BEACH PLANNING COMMISSION

The Cannon Beach Planning Commission will hold a virtual public hearing on **Thursday, January 27th, 2022** at **6:00 p.m.** at City Hall, 163 E Gower Street, Cannon Beach, regarding the following:

AA 21-01, Remand of the Jeff and Jennifer Harrison appeal of the City's approval to issue a development/building permit for 544 N Laurel Street. The property is located at 544 N Laurel Street (Tax Lot 07000, Map 51019AD), and in a Residential Medium Density (R2) zone. The request will be reviewed pursuant to Municipal Code, Section 17.88.160, Review consisting of additional evidence or de novo review and applicable sections of the zoning ordinance, conditions of approval of the Cannon Beach Preservation Planned Development Subdivision and approved plat.

AA 21-03, Dana Cardwell appeal of the City's administrative decision to approve development permit DP#21-23 for the Forest Lawn Right-of-Way for a stormwater pipe extension under Chapter 17.62 Grading, Erosion and Sedimentation Control. The proposed work is on the east side of Forest Lawn in front of Taxlot 51030DA01100 in a Residential Medium Density (R2) zone. The appeal will be reviewed pursuant to Municipal Code, Section 17.92.010, Development Permits, Section 17.62 Grading, Erosion and Sedimentation Control, Review Consisting of Additional Evidence or de Novo Review and applicable sections of the zoning ordinance.

CANCELLED

CU 21-03, Jacqueline O. Brown Revocable Trust request for a Conditional Use permit to replace approximately 50 cubic yards of sand that has eroded the bank on the west side of the property. The property is located at 116 N. Laurel St. (Tax Lot 04000, Map 51019DD) in a Residential Medium Density (R2) and Oceanfront Management Overlay (OM) zone. The request will be reviewed under Cannon Beach Municipal Code 17.14.030 Conditional Uses Permitted, 17.42.060 Specific Standards and 17.80.230 & 360 Shoreline Stabilization & Preservation Grading.

CU 21-04, Mike Morgan, on behalf of The LBC Trust, Mark Smith, Trustee, request for a Conditional Use permit for shoreline stabilization. The property is located at 4664 Logan Lane (Tax Lot 03401, Map 41006CB) in Residential Lower Density (RL) and Oceanfront Management Overlay (OM) Zone. The request will be reviewed under Cannon Beach Municipal Code 17.10.030 Conditional Uses Permitted, 17.42.060 Specific Standards and 17.80.230 & 360 Shoreline Stabilization & Preservation Grading.

CU 21-05, Mike Morgan, on behalf of the Martin and Maxine Siegel Living Trust, request for a Conditional Use permit for shoreline stabilization. The property is located at 3915 Ocean Ave. (Tax Lot 00400, Map 41006BC) in Residential Moderate Density (R1) and Oceanfront Management Overlay (OM) Zone. The request will be reviewed under Cannon Beach Municipal Code 17.12.030 Conditional Uses Permitted, 17.42.060 Specific Standards and 17.80.230 & 360 Shoreline Stabilization & Preservation Grading.

SR 21-06, David Vonada, on behalf of John Henry, application to allow a setback reduction to reduce the rear yard setback from the required 15'0" to 11'6" to build a new exit stair onto a

NOTICE TO MORTGAGEE, LIEN-HOLDER, VENDOR OR SELLER:
PLEASE PROMPTLY FORWARD THIS NOTICE TO THE PURCHASER

reconstructed second floor deck, according to chapter 17.14 Residential Medium Density Zone of the Municipal Code. The property is located at 1688 S. Hemlock St. (Tax Lot 04103, Map 51030DA), and in a Residential Medium Density (R2) zone. The request will be reviewed against the Municipal Code, Section 17.64.010, Setback Reduction, Provisions established.

All interested parties are invited to attend the hearings and express their views. Statements will be accepted in writing or orally at the hearing. Failure to raise an issue at the public hearing, in person or by letter, or failure to provide statements or evidence sufficient to afford the decision maker an opportunity to respond to the issue precludes appeal to the Land Use Board of Appeals based on that issue.

Correspondence should be mailed to the Cannon Beach Planning Commission, Attn. Community Development, PO Box 368, Cannon Beach, OR 97110 or via email at planning@ci.cannon-beach.or.us. Written testimony received one week prior to the hearing will be included in the Planning Commissioner's meeting materials and allow adequate time for review. Materials and relevant criteria are available for review at Cannon Beach City Hall, 163 East Gower Street, Cannon Beach, or may be obtained at a reasonable cost. Staff reports are available for inspection at no cost or may be obtained at a reasonable cost seven days prior to the hearing. Questions regarding the applications may be directed to Jeffrey Adams, 503-436-8040, or at adams@ci.cannon-beach.or.us.

The Planning Commission reserves the right to continue the hearing to another date and time. If the hearing is continued, no further public notice will be provided. The hearings are accessible to the disabled. Contact City Manager, the ADA Compliance Coordinator, at (503) 436-8050, if you need any special accommodations to attend or to participate in the meeting. TTY (503) 436-8097. Publications may be available in alternate formats and the meeting is accessible to the disabled.

Jeffrey C. Adams, PhD
Director of Community Development

Posted/Mailed: **January 5, 2022**

CONDUCT OF PUBLIC HEARINGS BEFORE CANNON BEACH CITY COUNCIL and PLANNING COMMISSION

A. At the start of the public hearing, the Mayor or Planning Commission Chair will ask the following questions to ensure that the public hearing is held in an impartial manner:

1. Whether there is a challenge to the jurisdiction of the City Council or Planning Commission to hear the matter;

2. Whether there are any conflicts of interest or personal biases to be declared by a Councilor or Planning Commissioner;

3. Whether any member of the Council or Planning Commission has had any ex parte contacts.

B. Next, the Mayor or Planning Commission Chair will make a statement which:

1. Indicates the criteria which apply to the action;

2. Cautions those who wish to testify that their comments must be related to the applicable criteria or other criteria in the Comprehensive Plan or Municipal Code that the person testifying believes apply;

3. States that failure to raise an issue in a hearing, or failure to provide statements or evidence sufficient to afford the decision makers an opportunity to respond to the issue precludes appeal based on that issue;

4. Prior to the conclusion of the initial evidentiary hearing, any participant may request an opportunity to present additional evidence or testimony regarding the application. The City Council or Planning Commission shall grant such request by continuing the public hearing or leaving the record open for additional written evidence or testimony.

C. The public participation portion of the hearing will then proceed as follows:

1. Staff will summarize the staff report to the extent necessary to enable those present to understand the issues before the Council or Planning Commission.

2. The Councilors or Planning Commissioners may then ask questions of staff.

3. The Mayor or Planning Commission Chair will ask the applicant or a representative for any presentation.

4. The Mayor or Planning Commission Chair will ask for testimony from any other proponents of the proposal.

5. The Mayor or Planning Commission Chair will ask for testimony from any opponents of the proposal.

6. Staff will be given an opportunity to make concluding comments or respond to additional questions from Councilors or Planning Commissioners.

7. The Mayor or Planning Commission Chair will give the applicant and other proponents an opportunity to rebut any testimony of the opponents.

8. Unless continued, the hearing will be closed to all testimony. The Council or Planning Commission will discuss the issue among themselves. They will then either make a decision at that time or continue the public hearing until a specified time.

NOTE: Any person offering testimony must first state their name, residence, and **mailing address** for the record. If representing someone else, the speaker must state whom he represents.

CU 21-03, Brown
116 N. Larch St.

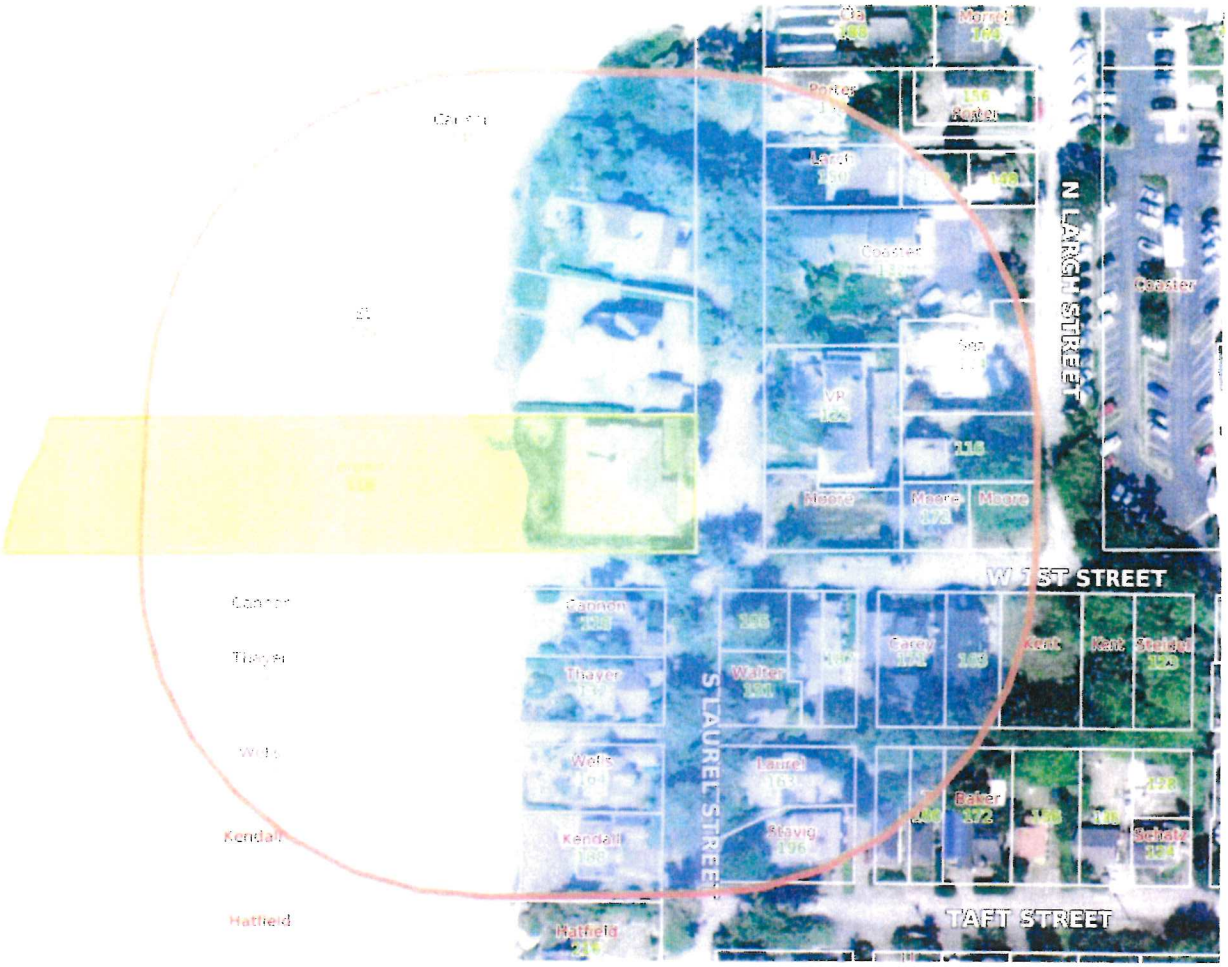

CU 21-[illegible], Brown
116 N Laurel St.

TAXLOTKEY	SITUS_ADDR	OWNER_LINE	STREET_ADD	CITY	STATE	ZIP_CODE
51019DD03800	140 N Laurel St	Carlson Blake	14570 Clay St	Broomfield	CO	80023
51019DD03900	124 N Laurel St	St Mary Sisters Of	4440 SW 148th Ave	Beaverton	OR	97007-2745
51019DD04000	116 N Laurel St	Brown Jacqueline O	2235 SW 85th Ave	Portland	OR	97225
51019DD04500	158 N Larch St	Porter Elisabeth Scott	2746 SE 35th Ave	Portland	OR	97202
51019DD04502	150 N Larch St	Larch Street Investments LLC	235 SE Avondale Way	Gresham	OR	97080
51019DD04605	132 N Larch St	Coaster Properties LLC	9775 SW Barnes Rd #370	Portland	OR	97225
51019DD04601		Porter Elisabeth Scott	2746 SE 35th Ave	Portland	OR	97202
51019DD04602	116 N Larch St	Blackford Gabriel	3800 Bridgeport Way W Ste. #A #297	University Place	WA	98466
51019DD04604	152 N Larch St	Bellerby Linda J Trustee	111 SE 48th Ave	Portland	OR	97215
51019DD04800	172 W 1st St	Moore Anthony P 1/2	PO Box 2110	Fairview	OR	97024-1815
51019DD05000	123 N Laurel St	VP Getaway LLC	11335 SW Foothill Dr	Portland	OR	97225
51030AA00100	118 S Laurel St	Cannon Beach House LLC	14800 NE North Woodinville Way	Woodinville	WA	98072-4484
51030AA00200	132 S Laurel St	Thayer John A	4355 Silver Ct	Lake Oswego	OR	97035
51030AA00300	164 S Laurel St	Wells CB LLC	701 Briar Rd	Bellingham	WA	98225
51030AA00400	188 S Laurel St	Ramsey Hamide	13815 SE Rivercrest Dr	Vancouver	WA	98683
51030AA00900		Kent Francis D/Patricia H Tr	4706 SE Arden St	Milwaukie	OR	97222-5075
51030AA01000	171 W 1st St	Carey Glen D	PO Box 1013	Cannon Beach	OR	97110
51030AA01001	163 W 1st St	M-By-Sea LLC	4220 SW Charming Way	Portland	OR	97225
51030AA01100	191 W 1st St	Edwards-Thompson LLC	937 NW Glisan St #1431	Portland	OR	97209
51030AA01101	187 W 1st St	Mooing Cows LLC	204 N Norton Ave	Los Angeles	CA	90004
51030AA01200	195 W 1st St	Hutchins House LLC	6516 SE 39th Ave	Portland	OR	97202-7711
51030AA01300	131 S Laurel St	Walter House LLC	1731 SE 101st Ave	Portland	OR	97216-2509
51030AA01400	163 S Laurel St	Laurel Street Vacation Home LLC	762 Ave G	Seaside	OR	97138
51030AA01401	196 W Taft St	Stavig Prudence M	11695 SE 147th Ave	Happy Valley	OR	97086-5825
51030AA01500	184 W Taft St	Cousin Camp LLC	PO Box 151524	San Rafael	CA	94215
51030AA15300		Cannon Beach House LLC	19900 144th Ave NE	Woodinville	WA	98072-4460
51030AA15307		Kendall William D Jr	3058 SW Fairview Blvd	Portland	OR	97205-5829
51030AA01600	180 W Taft St	180 W Taft LLC	PO Box 213	Fox Island	WA	98333
51030AA01700	172 W Taft St	Baker Stockton	435 Humboldt St	Denver	CO	80218
51019DD04600	124 N Larch St	Sea Lark Apartments LLC	1643 S Radcliffe Ct	Portland	OR	97219

Cannon Beach Planning Commission

Staff Report:

PUBLIC HEARING AND CONSIDERATION OF **AA 22-01**, GREG HATHAWAY'S, ON BEHALF OF JEFF AND JENNIFER HARRISON, APPEAL OF THE CITY'S ADMINISTRATIVE APPROVAL OF A BUILDING/DEVELOPMENT PERMIT FOR 534 NORTH LAUREL STREET. THE PROPERTY IS LOCATED AT 544 N. LAUREL STREET (TAX LOT 07002, MAP 51019AD), AND IN A RESIDENTIAL MEDIUM DENSITY (R2) ZONE. THE REQUEST WILL BE REVIEWED PURSUANT TO MUNICIPAL CODE, SECTION 17.88.180, REVIEW CONSISTING OF ADDITIONAL EVIDENCE OR DE NOVO REVIEW AND APPLICABLE SECTONS OF THE ZONING ORDINANCE, CONDITIONS OF APPROVAL OF THE CANNON BEACH PRESERVATION PLANNED DEVELOPMENT SUBDIVISION AND APPROVED PLAT.

Agenda Date: February 24, 2022 **Prepared By**: Jeffrey S. Adams, PhD

GENERAL INFORMATION

NOTICE

Public notice for this February 24th, 2022 Public Hearing is as follows:

A. Notice was mailed and posted at area Post Offices on February 17th, 2022;

DISCLOSURES

Any disclosures (i.e. conflicts of interest, site visits or ex parte communications)?

EXHIBITS

The following Exhibits are attached hereto as referenced. All application documents were received at the Cannon Beach Community Development office on January 25, 2022 unless otherwise noted.

"A" Exhibits – Application Materials

A-1 Administrative Appeal Application, dated January 25, 2022, including Hathaway letter of appeal, on behalf of Jeff and Jennifer Harrison;

"B" Exhibits – Agency Comments

None received as of this writing;

"C" Exhibits – Cannon Beach Supplements

C-1 Cannon Beach Preservation Planned Development Subdivision Conditions of Approval;, from LUBA Record 2016-033;

C-2 Cannon Beach Preservation Planned Development Subdivision Plat, Recorded November 21, 2016;, Recorded November 21, 2016;

C-3 Building Permit #164-20-000055-DWL, with Plan Attachments, excluding Structural Calculations; issued January 11, 2022;

C-4 Initial House Plans for Harding-Bouvet Residence, by Tolovna Architects, with requested revisions, dated May 31, 2021;

C-5 Alternative House Plans for Harding-Bouvet Residence, by Tolovna Architects, undated, received February 4, 2022;

C-6 Staff Report Addendum, November 12, 2021

"D" Exhibits – Public Comment

D-1 None received as of this writing;

SUMMARY & BACKGROUND

The appellants, Jeff & Jennifer Harrison, are appealing the administrative decision to approve a building/development permit (BP# 164-20-000055-DWL) authorizing a new residential structure at 534 N. Laurel, also known as the Harding/Bouvet Lot 4. This site is one of the lots in the Cannon Beach Preservation Planned Development Subdivision (also known as the Nicholson Planed Development), which was approved by the Cannon Beach City Council in 2016.

The application for a home on this lot, including accompanying building plans, was received August 14, 2020 and staff began the Plan Review process within the week. The Plan Review process incorporates all Oregon Building Code requirements under Title 15 of the Cannon Beach Municipal Code as well as all applicable portions of Title 17 Zoning Code, including the Planned Development plat and conditions of approval for the Planned Development.

The scope of Plan Review is important to the efficient processing of applications for building permits. CBMC 17.92.010(A)(2) states, "In the case of a structure or building requiring a building permit, the development permit may be part of the building permit." Thus, BP# 164-20-000055-DWL, **Exhibit C-3**, serves as both the Building Permit and Development Permit for the Harding-Bouvet Residence. In the case of a development permit accompanying a building permit, the scope of review is typically limited, as the use is outright permitted in the zone, and it is not intended to grant an opportunity to revisit issues settled in previous actions, such as the appropriateness of the underlying zoning, any variances or setback reductions, or, as in this case, issues decided in the subdivision process.

Staff corresponded with the Harding-Bouvet's representatives over a number of months and a number of revisions of the Application, before a set of plans which meets the conditions of approval, plat and specifications of the agreements, were produced and approved. See **Exhibit C-3**. Final Building Permit approval was issued on January 11, 2022. On January 25, 2022, within the 14 consecutive day appeal period, Mr. Hathaway on behalf of Jeff and Jennifer Harrison filed an appeal of the administrative decision, based on three arguments of appeal.

1. <u>Building Permit violates PUD Condition #16</u>

First, the appellants argue that

> "Materially, the proposed new house is allowed two stories, but the proposed new garage is not."

Appellants argument is based on Condition #16 of the Cannon Beach Preservation Subdivision, which provides as follows:

> *The homes to be built on the site shall all comply with the following design requirements:*

{...}

- *The yard setbacks for the development will be as specified on Sheet C2.2 from KPFF Consulting Engineers, submitted on October 20, 2015, regardless of the orientation of the main front entrance or street to front, side, and rear yards. Should any lot contain a garage or carport, it shall be no larger than a two car garage. Garages or carports may be located under a house due to the natural topography,* ***but if the garage is detached, then the garage may not include a second story or livable space****. The exterior of any garage must be the same as the house.*

So, the question presented in this issue is whether the proposed garage has a "second story" and whether the garage is "detached" as those terms are used in the condition of approval.

a. Number of Stories.

The City of Cannon Beach Municipal Code's (CBMC) Zoning language does not define 'story' even though CBMC 17.04.283, which defines gross floor area (see below), refers to it, and those terms that have been at the heart of previous appeals involving thisPUD.

17.04.283 Gross floor area.

"Gross floor area" means the sum, in square feet, of the gross horizontal areas of all floors of a building, as measured from the exterior walls of a building, including supporting columns and unsupported wall projections (except eaves, uncovered balconies, fireplaces and similar architectural features), or if appropriate, from the center line of a dividing wall between buildings. Gross floor area shall include:

1. Garages and carports.

2. Entirely closed porches.

3. Basement or attic areas determined to be habitable by the city's building official, based on the definitions in the building code.

4. Unhabitable basements areas where the finished floor level of the first floor above the basement is more than three feet above the average existing grade around the perimeter of the building's foundation.

In addition the calculation of gross floor area shall include the following:

5. All portions of the floor area of a story where the distance between the finished floor and the average of the top of the framed walls that support the roof system measures more than fifteen feet shall be counted as two hundred percent of that floor area.

In their appeal, the appellants contend that "both structures qualify as two-story structures per CBMC, Oregon Residential Specialty Code (which is recognized by Clatsop County, Oregon as, "Code in Effect")." It appears that the appellants are referring to language from the Oregon Residential Specialty Code, which is not included in the letter of appeal.

The 2018 Edition of the International Building Code, as published by the International Code Council, and amended by the Building Codes Division is adopted by ORS 918-460-0010, is enforced in the City (CBMC 15.04.110) and that code defines 'Story' as follows:

2018 International Building Code (IBC) BASIC Upgrade to Premium

Fifth Version: Sep 2020

CHAPTER 2 DEFINITIONS

[BG] STORY. That portion of a building included between the upper surface of a floor and the upper surface of the floor or roof next above (see *"Basement," "Building height," "Grade plane"* and *"Mezzanine"*). A story is measured as the vertical distance from top to top of two successive tiers of beams or finished floor surfaces and, for the topmost story, from the top of the floor finish to the top of the ceiling joists or, where there is not a ceiling, to the top of the roof rafters.

[BG] STORY ABOVE GRADE PLANE. Any *story* having its finished floor surface entirely above *grade plane*, or in which the finished surface of the floor next above is:

1. More than 6 feet (1829 mm) above *grade plane*; or
2. More than 12 feet (3658 mm) above the finished ground level at any point.

The Community Development Department responded to the initial set of plans, **Exhibit C-4,** by requesting that the architect revise the plans to remove the vaulted ceiling of the garage, while allowing only an unfinished rat-slab concrete foundation, as suggested by the geo-tech report for structural stability. The Harding-Bouvet's were also required to remove the walk-in entry to the under-flooring, to allow the maximum 3' x 5' crawl-space entry, to further limit habitability and use of the under-flooring area.

The discrepancies between the City's gross floor area language regarding stories and the IBC boil down to interpretations over the story above "grade plane,"; in this case, the City's decision found that the garage did not contain a second story because all other livable space had been removed.

b. Is the Garage Detached.

But just as Condition 16 turns on 'story' as a term, it also turns on 'detached.' Detached is another term which is not defined in the CBMC but referred to in many instances. The Building Official has traditionally regarded a building to be attached when the garage or accessory structure shares a load-bearing wall. In other words, if the applicant were to attach the garage directly to the primary residence, sharing the easterly wall of residence, then Condition 16's stipulation regarding detached garages, is no longer applicable.

The applicant has provided an 'alternative' set of plans, **Exhibit C-5**, showing an attached garage, as described above. If the Planning Commission finds the appellant's argument to not allow detached two-story garages persuasive, as defined by the Oregon Residential Specialty Code, then approval could be conditioned upon the attachment of the garage, as depicted in **Exhibit C-5**, satisfying Condition 16.

2. The Building Permit violates the Cannon Beach Comprehensive Plan.

Second, the Appellants claim that the building permit violates the Cannon Beach Comprehensive Plan's (CBCP) Vision Statement:

> *"Cannon Beach will continue to be a small town where the characteristics of a village are fostered and promoted. Both the physical and social dimensions associated with a village will be integral to Cannon Beach's evolution during the next two decades. The elements of the town's physical form which the plan will foster are: Development that honors the city's physical setting. A compact development pattern where various land uses are readily accessible to residents and visitors. A distinct edge to the town which defines the separation of urban from rural and natural resource uses. Mixed land uses which promote the livability of the town. Buildings that are generally small in scale and appropriate to their setting." (CBCP, p. 5)*

Building Permits are not reviewed against the Cannon Beach Comprehensive Plan, as the zoning ordinances and building codes, under which the plan review process function, are approved through a legislative process under the guidance of the Comprehensive Plan. See also ORS 197.195(1), which prohibits the use of comprehensive plan provisions in reviewing limited land use decisions, such as the this.

3. The Building Permit violates the PUD's Shared Access and Maintenance ("SAMA") in Violation of PUD Condition #2.

Condition of approval #2 of the PUD approval provides as follows:

> *"2. Applicant will prepare and record a shared access and maintenance easement for the shared drive serving the four lots contemporaneous with or within three months following recordation of the final plat for this development. The proposed retaining wall for the access drive will be a "living wall" design as shown in the documents submitted by the applicant. Maintenance of wall vegetation will be addressed as part of the shared access and maintenance agreement required by this condition. The agreement will identify the City as a benefitted party and allow for City enforcement of the maintenance requirements, including maintenance of the living wall." (**Exhibit C-1, p. 14-5)***

In short, that condition required the developer of the PUD to record a "shared access and maintenance easement" (a "SAMA"), and requires it to address maintenance of certain common areas. Appellants do not argue that the proposed house violates the condition of approval; rather, on page 4 of their appeal, they argue that the proposed house is inconsistent with one of the provisions within the SAMA :

> "The only specifically allowed activities in the identified shared/common open spaces of the PUD and SAMA are limited to, 'removing non-native vegetation,' and are not to be non-exclusionary improvements serving only the burdened lot."

Generally speaking, in reviewing applications, the City reviews whether a proposal is consistent with the City's code; in some circumstances, such as this PUD, it also reviews for compliance with conditions of approval from previous decisions. However, generally, the City does not review proposals for consistency with real estate agreements, such as easements or CC&Rs. Enforcing those provisions are typically beyond the authority of the City and should be resolved in circuit court. There may be instances when resolving a real estate question is critical to determine whether a code provision is met or not, but this is not such a case.

In this case, it is not disputed that the developer complied with the condition of approval by preparing and recording the SAMA. The Appellants are not seeking to enforce the requirements of the SAMA, but the provisions of that SAMA that go beyond the requirements of the condition. That is not the Planning Commission's role and it should reject this basis for appeal. As staff stated in a previous staff report on this issue, "The review of this building permit is limited to CBMC Title 15, and the applicable parts of CBMC Title 17, as well as the applicable parts of the PUD conditions of approval. None of those provisions authorize the City to refuse to issue a building permit on this basis. The City may take "enforcement action" under its code, but that does not extend to allowing it to refuse to issue a building permit that otherwise meets the requirements of its code and the PUD." (**Exhibit C-6**)

Conclusion.

This application for a building permit continues the development of the Cannon Beach Preservation Planned Development Subdivision and, although there has been a history of controversy over this development, the City has repealed the Planned Development language from the Cannon Beach Municipal Code and has begun a Code Audit to address the deficiencies in the terms, processes and standards of the Code. The Planning Commission has an opportunity to take another step forward by either upholding the administrative approval on the grounds that the under-flooring is not habitable space and thus, not a two-story structure, or by modifying the decision to condition approval on the attachment of the garage to the primary dwelling, as depicted in the 'alternative' plans, presented as, **Exhibit C-5**.

APPLICABLE PROCEDURE

17.88.160 Scope of review.

A. An appeal of a permit or development permit shall be heard as a de novo hearing.

17.88.180 Review consisting of additional evidence or de novo review.

A. The reviewing body may hear the entire matter de novo; or it may admit additional testimony and other evidence without holding a de novo hearing. The reviewing body shall grant a request for a new hearing only where it finds that:

1. The additional testimony or other evidence could not reasonably have been presented at the prior hearing; or

2. A hearing is necessary to fully and properly evaluate a significant issue relevant to the proposed development action; and

3. The request is not necessitated by improper or unreasonable conduct of the requesting party or by a failure to present evidence that was available at the time of the previous review.

B. Hearings on appeal, either de novo or limited to additional evidence on specific issue(s), shall be conducted in accordance with the requirements of Sections 17.88.010 through 17.88.100.

C. All testimony, evidence and other material from the record of the previous consideration shall be included in the record of the review. (Ord. 90-10 § 1 (Appx. A § 62); Ord. 89-3 § 1; Ord. 79-4 § 1 (10.084))

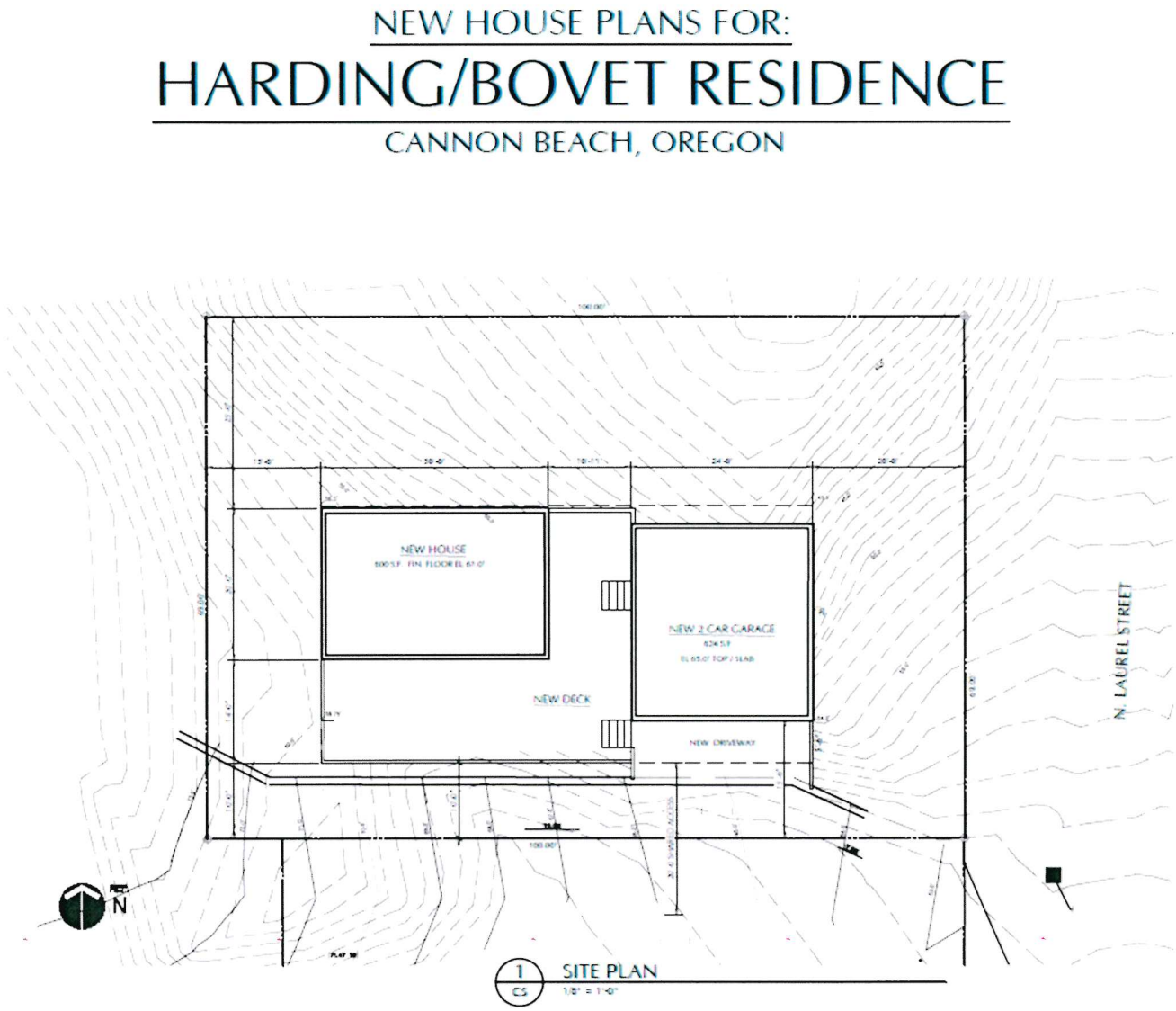

Figure 1, Harding-Bouvet Lot 4 Site Plan

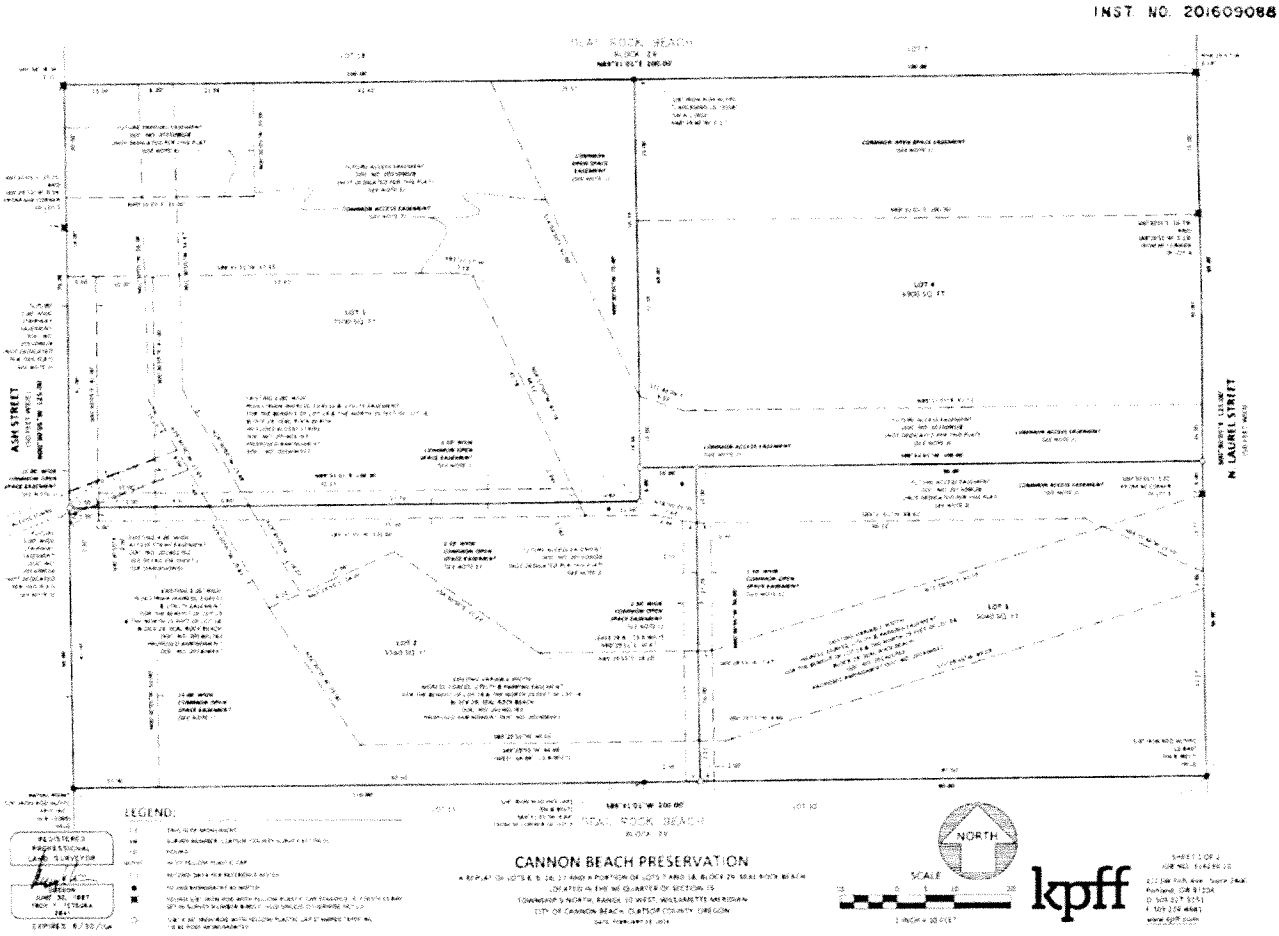

Figure 2, Cannon Beach Preservation PD Subdivision

DECISION AND CONDITIONS

MOTION: Having considered the evidence in the record, I move to ***tentatively*** (affirm/reverse/modify in whole or part) the Hathaway application, on behalf of Jeff & Jennifer Harrison, for an appeal of an administrative decision to approve Building Permit (BP# 164-21-000179-DWL), application **AA# 22-01**, as discussed (subject to the following conditions) and requests that staff draft findings for review and adoption, at a special called meeting, next Thursday at 6PM, March 3rd, 2022, at City Hall.

1. Attachment of the Garage to the Primary Residence, as depicted in **Exhibit C-5**.

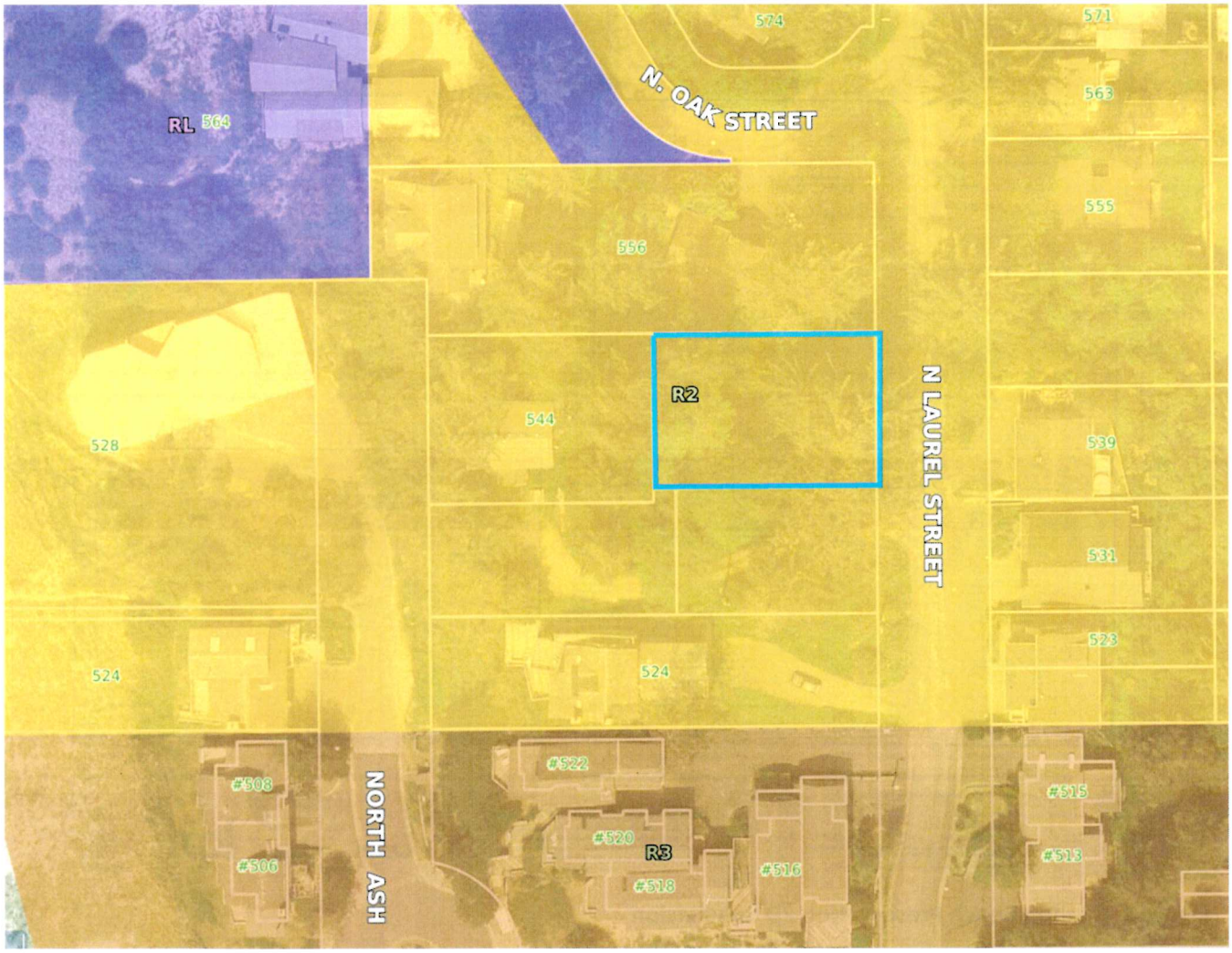

Site Location Map

Street View, looking west, from the driveway easement

CITY OF CANNON BEACH

NOTICE OF APPEAL - ADMINISTRATIVE DECISION

Appellant's Name: Gregory Hathaway

Email Address: greg@hathawaylarsen.com

Mailing Address: 1331 NW Lovejoy St. Suite 950

Portland, OR 97209

Telephone: 503-303-3103

1. Appeal of Administrative Decision by _____, regarding:

as stated in letter dated _____.

2. Specific grounds relied upon for the appeal, including any Zoning Ordinance criteria or standards that you consider to be relevant:

Please attach additional pages, if needed, and any other relevant information.

FEE: $600.00

Appellant Signature: _____ Date: _____

For Staff Use Only:

Date Appeal Received: _____ By: _____

Appeal Fee Paid: _____ Receipt No.: _____

PAID JAN 25

Fee:
803 - Planning $600
(Last revised March 2021)

BEFORE THE CITY OF CANNON BEACH, OREGON

In the Matter of the Appeal of the Issuance of Building Permit No. 164-20-000055-DWL for Property located at 534 N. Laurel Street by Petitioners Jeff and Jennifer Harrison.	))))))	**Notice of Appeal**

Petitioners Jeff and Jennifer Harrison ("Petitioners") file this Notice of Appeal regarding the issuance of Building Permit No 164-20-000055-DWL (the "Building Permit") for property located at 534 N. Laurel Street ("Property") that was issued by the City of Cannon Beach on January 11, 2022. This Notice of Appeal addresses the requirements of Cannon Beach Municipal Code ("CBMC") 17.88.150. As explained below, the Building Permit must be revoked based on this Notice of Appeal.

A. <u>An identification of the Decision sought to be reviewed, including the date of the Decision.</u>

The City approved the Building Permit on January 11, 2022. Petitioners timely filed this Notice of Appeal with the City and paid the $600.00 filing fee on January 25, 2022 in compliance with CBMC 17.88.150.

B. **A statement of the interest of the person seeking the review.**

Petitioners' home is directly across from the City-approved Nicholson PUD ("PUD") and from the Property which was issued the Building Permit (the subject matter of this Notice of Appeal). Petitioners have participated in the City's land use process regarding the PUD and have objected to the overbuilding of this Property.

C. **The specific grounds relied upon for review.**

Petitioners rely on the following grounds for appeal of the Building Permit:[1]

1. **The Building Permit violates PUD Condition #16.**

The submitted Building Plan approved by the City proposes two new buildings: a new two-story house and a new two-story, two-car

[1] While not directly challenged in this appeal, for clarity we note that PUD approval Condition #3 imposes a 9,000 sq. ft. cap of habitable space for the entire PUD, split amongst the four lots. Through various deed restriction amendments, essentially trading allocatable square footage of habitable space from one lot to another, the subject lot for this appeal (NE lot, Lot #4) is allocated 600 sq. ft. of habitable space. The maximum allowed Floor Area Ratio (FAR) for Lot #4 (and all lots on the PUD) is limited by CMBC 17.14.040(D) at 60% of lot size and is also not specifically challenged in this appeal. However, based on the small amount of allowed habitable space, and prior attempts to skirt code and conditions to convert required unhabitable space to habitable on this PUD, we believe caution is warranted regarding what is ultimately approved.

detached garage. The PUD's approval Condition #16 unambiguously prohibits two-story garages. Although neither structure is identified as two-story structures by the Building Plans or staff, Petitioners contend that both structures qualify as two-story structures per CBMC, Oregon Residential Specialty Code (which is recognized by Clatsop County, Oregon as, "Code in Effect"), as well as pertinent determinations made by City Planner Jeffrey Adams as part of the record for the approval of the Building Permit.

Materially, the proposed new house is allowed two stories, but the proposed new garage is not. Thus, the submitted building plans, incorrectly approved by the City, violate PUD approval Condition #16. As a result, the Building Permit must be revoked.

2. <u>The Building Permit violates the Cannon Beach Comprehensive Plan.</u>

The Building Permit violates the City's Comprehensive Plan which acknowledges that the City will foster and promote the characteristics of a village that honors the City's physical setting and allows buildings which are generally small in scale and appropriate to their setting.

In the Cannon Beach Comprehensive Plan, on page 5, the City's Vision Statement includes the following:

> *"Cannon Beach will continue to be a small town where the characteristics of a village are fostered and promoted. Both the physical and social dimensions associated with a village will be integral to Cannon Beach's evolution during the next two decades. The elements of the town's physical form which the plan will foster are: Development that honors the city's physical setting. A compact development pattern where various land uses are readily accessible to residents and visitors. A distinct edge to the town which defines the separation of urban from rural and natural resource uses. Mixed land uses which promote the livability of the town. Buildings that are generally small in scale and appropriate to their setting."* (emphasis added).

The proposed two-story garage is not small in scale nor appropriate to the setting on this Property and is in violation of the City's Vision Statement. As a result, the Building Permit must be revoked.

3. **<u>The Building Permit violates the PUD's Shared Access and Maintenance Agreement ("SAMA") in Violation of PUD Condition #2.</u>**

PUD Condition #2 required the adoption of a SAMA for the PUD. The Building Permit allows the installation of a drywell system in one of the "Common Open Space Easement" areas identified on Lot #4 of the PUD and the SAMA. The only specifically allowed activities in the identified shared/common open spaces of the PUD and SAMA are limited to, "removing non-native vegetation", and are not to be non-exclusionary improvements serving only the burdened lot.

The proposed drywell system does not qualify for use as "removing non-native vegetation" and is clearly exclusionary because it serves only Lot #4 and not any other PUD lot. As a result, the Building Permit must be revoked.

D. **For a review of a decision by the design review board or planning commission, if a de novo review or review by additional testimony and other evidence is requested, a statement relating the request to the factors listed in Section 17.88.180. (Ord. 94-08 § 20; Ord. 90-3 § 18; Ord. 89-3 § 1; Ord. 79-4 § 1 (10.081)).**

This provision is not applicable to this Notice of Appeal since it is an appeal of a Development Permit. The City's review of Petitioners' Notice of Appeal shall be heard De Novo pursuant to CBMC 17.88.160.

Respectfully submitted.

DATED this 25th day of January 2022.

HATHAWAY LARSON LLP

By: /s/ Gregory S. Hathaway

Gregory S. Hathaway, OSB #731240
1331 NW Lovejoy Street, Suite 950
Portland, OR 97209
Of Attorneys for Appellants Jeff and Jennifer Harrison

applicant to provide a geologic site investigation report. This approval is conditioned on applicant providing such a report by condition of approval 15. This building permit applicaiton requirement is met.

FINAL PLAT

A planned development is a modified subdivision. Approved subdivision plats must be recorded with the County Surveyor. The plat cannot be recorded until the City's review is completed. Cannon Beach Municipal Code section 16.04.210 establishes procedures for final plat review:

> *A. If the city determines that the final plat for either a subdivision or partition conforms to the tentative plan and applicable conditions have been met, the chairman of the planning commission shall sign and date the final plat.*
>
> *B. If the city determines that the final plat does not conform to the tentative plan, the plat will be forwarded to the planning commission for its review. The planning commission shall approve or deny the modifications to the final plan.*

The final plat submittal by applicant on March 1, 2016 conforms to the tentative plan and meets all conditions. Approval condition 12 implements this requirement.

SUPPLEMENTAL FINDINGS: The staff reports, including but not limited to those dated December 21, 2015 and March 1, 2016, and the applicant submittals, including but not limited to those dated October 20, 2015, December 21, 2015, January 21, 2016, January 27, 2016, February 25, 2016, and March 1, 2016. Address all of the approval criteria and other requirements thoroughly. Those reports and materials are incorporated and adopted herein as findings, except to the extent any portions of those reports or materials are contradicted by the express findings in this document.

APPROVAL CONDITIONS FROM PRELIMINARY APPROVAL

The City Council's March 2015 preliminary approval was subject to seven conditions. Those conditions are listed here:

1. The lot configuration and building envelope for this approval shall substantially comply with Exhibit C7.4, except that the building envelopes for Lot 3 and Lot 4 will each be shifted five feet to the west.

2. Any damage to Laurel Street resulting from construction on the subject property will be repaired at the owner's expense, and the street will be restored to its current condition. Applicant shall not pave Laurel Street.

3. Applicant will prepare and record a shared access and maintenance easement for the shared drive serving the four lots contemporaneous with or within three months following recordation of the final plat for this development. The proposed retaining wall for the access drive will be a

"living wall" design as shown in the documents submitted by the applicant. Maintenance of wall vegetation will be addressed as part of the shared access and maintenance agreement required by this condition.

4. The total square footage of habitable space on the site shall not exceed 9,000 square feet. Habitable space includes the enclosed areas in residences including all floors of living space and excludes driveways, decks, porches, garages, and uninhabitable accessory buildings.

5. Applicant will retain a certified arborist prior to beginning construction of the driveway to make recommendations on measures to reduce the likelihood of damage to the two large spruce trees on the site. The arborist will prepare a report with his or her recommendations—those recommendations will be incorporated into the relevant design documents, and applicant will follow those recommendations.

6. Within one year after the date of this preliminary approval, applicant will submit a final plan for development indicating the location of water facilities, sewer facilities, drainage facilities, building envelopes in compliance with Condition 1 above, landscaping plans, and grading plans. The final plan will be reviewed by the Planning Commission, who will make a recommendation to City Council regarding compliance of the final plan with this preliminary approval. Council will make the final decision on the final plan. There is no time limit for construction of the four homes authorized by this approval, and there is no minimum time requirement in which these four homes must be built by applicant or another owner.

7. Only one driveway/access point shall be allowed off Laurel Street.

The City Council finds that the proposed final plan conforms to these conditions. Several of these conditions are carried forward in modified form as final plan conditions.

CITY COUNCIL ACTION

The City Council approves the proposed final plan as submitted subject to the following conditions:

1. Any damage to Laurel Street resulting from construction on the subject property will be repaired at the Applicant's expense, and the street will be restored to its current condition. Applicant shall not pave Laurel Street. Before commencing construction, applicant will provide the City photos of the existing condition of Laurel Street.

2. Applicant will prepare and record a shared access and maintenance easement for the shared drive serving the four lots contemporaneous with or within three months following recordation of the final plat for this development. The proposed retaining wall for the access drive will be a "living wall" design as shown in the documents submitted by the applicant. Maintenance of wall vegetation will be addressed as part of the shared access and maintenance agreement required by

this condition. The agreement will identify the City as a benefitted party and allow for City enforcement of the maintenance requirements, including maintenance of the living wall.

3. The total square footage of habitable space on the site shall not exceed 9,000 square feet. Habitable space includes the enclosed areas in residences including all floors of living space and excludes driveways, decks, porches, garages, and uninhabitable accessory buildings. Unfinished attics, crawl spaces, storage areas and similar spaces are not habitable space. Sleeping lofts, detached accessory sleeping quarters, fully enclosed sun rooms, and hallways are habitable space. The habitable spaces shall be distributed initially to allow 2,000 square feet to Lot 1, 3,300 square feet to Lot 2, 2,700 square feet to Lot 3 and 1,000 square feet to Lot 4. Those allocations may be amended by future owners of the lots, but in no case may any amendment allow the total square footage of habitable space on the site exceed 9,000 square feet.

4. Applicant will retain a certified arborist prior to beginning construction of the driveway to make recommendations on measures to reduce the likelihood of damage to the two large spruce trees on the site. The arborist will prepare a report with his or her recommendations. Those recommendations will be incorporated into the relevant design documents, and applicant will follow those recommendations. The arborist will be on-site during any construction related tree removal or pruning to advise contractors. Minor realignments, modifications, or other changes to the driveway or buried utilities needed to avoid damaging trees may be approved by the code enforcement officer (Planning Director) based on the arborist's recommendations pursuant to CBMC 17.40.080. Violations of this condition may be subject to the penalties in CBMC 17.70.030.N, as well as any other remedies available to the City.

5. There is no time limit for construction of the four homes authorized by this approval, and there is no minimum time requirement in which these four homes must be built by applicant or another owner.

6. For this project, given the larger size of the sewer extension to the interior of the parcel, the developer's contractor will coordinate all work with the City Public Works Department for the sewer extension.

7. The water services will be extended to the property line by City crews. Installation and maintenance of water lines on the subject property will be the responsibility of the developer.

8. Maximum building height shall be calculated using applicable requirements in the city's municipal code.

9. No impact or vibratory hammer installation will be used. Any piles that may be used will consist of either helical, augured, drilled, or hydraulically advanced systems.

10. Applicant shall provide the City with a bond equal to $140,000 to secure the construction of utilities and driveway improvements prior to beginning of construction of these improvements.

11. Prior to recording the final plat applicant shall provide the City with copies of legal documents necessary for the maintenance and use of the planned development. These documents shall address, at a minimum, the requirements of conditions 2 and 3.

12. Applicant shall record a final plat with the County Surveyor. If it is substantially the same as the final plat approved by the City Council, the Chairman of the City Planning commission shall sign it in accordance with CBMC 16.04.210.

13. Development schedule: Applicant will commence installation of utilities and construction of the shared drive within one year after this approval in PD 15-01 becomes a final land use decision and proceed diligently with the installation of utilities and construction of the shared drive until their completion.

14. All development on the site shall follow the recommendations contained in the July 1, 2015, geotechnical report prepared by Geotechnical Solutions Inc., and signed and stamped by Don Rondema, unless modified by subsequent, more detailed investigations and analysis by a similarly qualified person. A qualified geotechnical engineer (PE and GE) geologist shall be on-call during construction to observe representative portions of cut slopes, structural fills and wall foundation subgrades. The GE must also provide a final stamped letter regarding geotechnical compliance when construction of the driveway retaining wall is complete.

15. A final geotechnical site investigation report shall be prepared for each lot prior to the approval of building permits. Recommendations in the geotechnical site investigation report shall be incorporated into the house design documents and building permit. The geotechnical site investigation report shall comply with the specifications of CBMC 17.50.040 and meet the following requirements of the Cannon Beach Geologic Site Investigation Report Checklist:

- Be prepared by a registered geologist or engineering professional ("GOEP"),
- Be in writing and signed by the GOEP,
- Consider and describe any known landslides on or influencing the site,
- Describe the existing condition of the site,
- Describe the site investigation, including any subsurface explorations performed by the GEOP on or in the vicinity of the site, and
- Provide any recommendations and findings from the GOEP as contemplated by CBMC 17.50.040.A.2 and CBMC 17.50.040.A.3.

16. The homes to be built on the site shall all comply with the following design requirements:

- The exterior of all structures shall be wood siding or wood shingles. The material may be natural or stained. No exterior surface shall be concrete or masonry, except for concrete or masonry that is part of a foundation, house trim, or fireplace chimney.
- The roof of dwellings on Lots 1, 2, 3, and 4 shall be composition, wood shake, or shingle with a pitch.
- The main front entrance of the house on Lot 1 shall face southerly. The main front entrance of the house on Lot 2 shall face northerly or southerly. The main front entrance of the house on Lot 3 shall face easterly. The main front entrance of the house on Lot 4 shall face easterly or southerly.
- The yard setbacks for the development will be as specified on Sheet C2.2 from KPFF Consulting Engineers, submitted on October 20, 2015, regardless of the orientation of the main front entrance or street to front, side, and rear yards. Should any lot contain a garage or carport, it shall be no larger than a two car garage. Garages or carports may be located under a house due to the natural topography, but if the garage is detached, then the garage may not include a second story or livable space. The exterior of any garage must be the same as the house.

17. Before permits for the driveway retaining wall are approved the applicant shall provide to the City an executed contract with a landscape professional responsible for the installation and maintenance of plant materials on the wall and shall provide a timeline for the establishment of plantings on the wall. If plants are not successfully established within those timelines, the City may take any necessary enforcement actions to assure that the requirements of the final plan and this condition are met.

18. Only one driveway/access point shall be allowed off Laurel Street.

INST. NO. 201609088

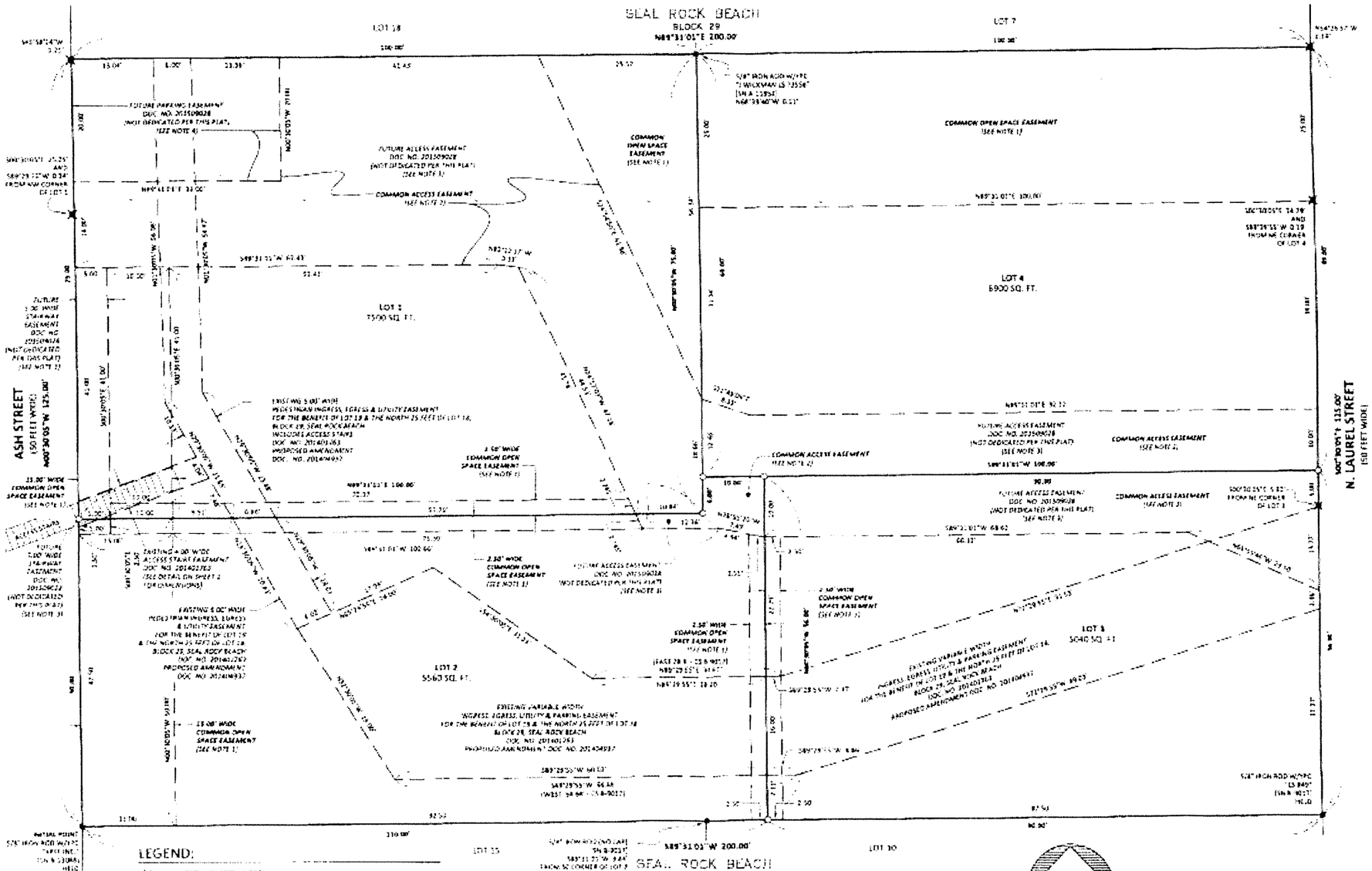

LEGEND:

	DRILLED MONUMENT
SN	SURVEY NUMBER CLATSOP COUNTY SURVEY RECORDS
	FOUND
W/YPC	WITH YELLOW PLASTIC CAP
	RECORD DATA PER REFERENCE NOTES
●	FOUND MONUMENTS AS NOTED
✖	FOUND 5/8" IRON ROD WITH YELLOW PLASTIC CAP STAMPED "C. FONTES LS 849" PER SURVEY NUMBER B-8017 (FIELD UNLESS OTHERWISE NOTED)
○	SET 5/8" IRON ROD WITH YELLOW PLASTIC CAP STAMPED "KPFF, INC." TO BE POST MONUMENTED

REGISTERED PROFESSIONAL LAND SURVEYOR
OREGON
JUNE 30, 1997
TROY T. TETSUKA
2847
EXPIRES 6/30/16

CANNON BEACH PRESERVATION

A REPLAT OF LOTS 8, 9, 16, 17 AND A PORTION OF LOTS 7 AND 18, BLOCK 29, SEAL ROCK BEACH
LOCATED IN THE NE QUARTER OF SECTION 35
TOWNSHIP 5 NORTH, RANGE 10 WEST, WILLAMETTE MERIDIAN
CITY OF CANNON BEACH, CLATSOP COUNTY, OREGON
DATE: FEBRUARY 23, 2016

NORTH

SCALE
10 0 5 10 20
1 INCH = 10 FEET

kpff

SHEET 1 OF 2
JOB NO. 314235.10

111 SW 5th Ave., Suite 2400
Portland, OR 97204
P: 503.227.3251
F: 503.224.4661
www.kpff.com

INST. NO. 201609088

CANNON BEACH PRESERVATION

A REPLAT OF LOTS 8, 9, 16, 17 AND A PORTION OF LOTS 7 AND 18, BLOCK 39, SEAL ROCK BEACH
LOCATED IN THE NE QUARTER OF SECTION 19
TOWNSHIP 5 NORTH, RANGE 10 WEST, WILLAMETTE MERIDIAN
CITY OF CANNON BEACH, CLATSOP COUNTY, OREGON
DATE: FEBRUARY 23, 2016

DECLARATION:

KNOW ALL PEOPLE BY THESE PRESENTS THAT LUCKY'S COTTAGES, LLC OWNER OF THE LANDS SHOWN ON THE ANNEXED MAP AND MORE PARTICULARLY DESCRIBED IN THE ACCOMPANYING SURVEYOR'S CERTIFICATE, HAS CAUSED THE SAME TO BE SUBDIVIDED INTO LOTS AS SHOWN ON SAID MAP. THE DECLARANT DOES HEREBY GRANT ALL EASEMENTS AS SHOWN HEREON OR STATED IN SAID MAP FOR THE USE AND BENEFIT OF ALL IN ACCORDANCE WITH THE PROVISIONS OF CHAPTER 92 OF THE OREGON REVISED STATUTES. THE DECLARANT MAKES NO CLAIM TO ANY LANDS BEYOND THAT DESCRIBED IN THE SURVEYOR'S CERTIFICATE WITH RESTRICTIONS AS NOTED HEREON.

JEFFREY MCPHERSON
PRESIDENT, LUCKY'S COTTAGES, LLC

ACKNOWLEDGEMENT:

STATE OF OREGON
COUNTY OF Multnomah

KNOW ALL PEOPLE BY THESE PRESENTS, THAT ON THIS 6 DAY OF May 2016, BEFORE ME, A NOTARY PUBLIC IN AND FOR SAID COUNTY AND STATE, PERSONALLY APPEARED

JEFFREY MCPHERSON AS President AND THAT THE ACKNOWLEDGED SAID INSTRUMENT TO BE OF THEIR OWN FREE ACT

NOTARY PUBLIC FOR THE STATE OF OREGON

Brenan Rebecca Dwyer
PRINTED NAME

COMMISSION NUMBER 920606

MY COMMISSION EXPIRES ON THE 14 DAY OF October 2017

CONSENT AFFIDAVIT:

A SUBDIVISION PLAT CONSENT AFFIDAVIT FROM CLATSOP COMMUNITY BANK, TRUSTEE, THE BENEFICIARY, IS RECORDED AS

DOCUMENT NO. 2016 09086 OF CLATSOP COUNTY RECORDS.

DETAIL

SCALE: 1" = 5'

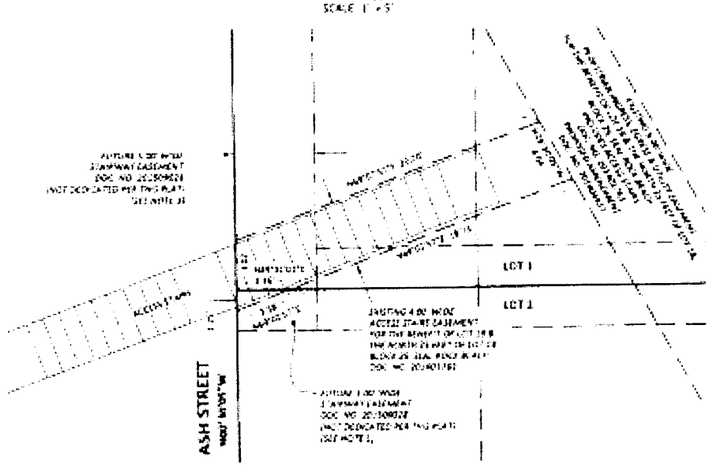

CITY OF CANNON BEACH APPROVALS:

APPROVED THIS 2 DAY OF March 2016

CITY OF CANNON BEACH PLANNING COMMISSION CHAIR

APPROVED THIS 28 DAY OF April 2016

CITY OF CANNON BEACH CITY OF ENGINEERING

APPROVED THIS 28 DAY OF April 2016

CITY OF CANNON BEACH, MAYOR

CLATSOP COUNTY APPROVALS:

APPROVED THIS 14th DAY OF November 2016

CLATSOP COUNTY SURVEYOR

ALL TAXES, FEES, ASSESSMENTS AND OTHER CHARGES AS PROVIDED BY ORS 92.095 HAVE BEEN PAID THROUGH Nov. 14 2016

CLATSOP COUNTY TAX COLLECTOR

APPROVED THIS 18 DAY OF NOV 2016

THE CLATSOP COUNTY BOARD OF COMMISSIONERS

CERTIFICATE OF COUNTY CLERK

STATE OF OREGON
COUNTY OF CLATSOP

DO HEREBY CERTIFY THAT THIS SUBDIVISION PLAT WAS RECEIVED FOR RECORD ON November 21 2016 AT 2:00 pm AND RECORDED IN DOCUMENT NO. 2016 09088 CLATSOP COUNTY RECORDS

CLATSOP COUNTY CLERK

NARRATIVE

THE PURPOSE OF THIS SURVEY IS TO SUBDIVIDE THE SUBJECT PROPERTY INTO LOTS AS SHOWN HEREON. THE SUBJECT PROPERTY IS DESCRIBED IN DEED TO LUCKY'S COTTAGES, LLC IN INSTRUMENT NO. 2015-09025, CLATSOP COUNTY RECORDS. SAID INSTRUMENT DESCRIBES THE SUBJECT PROPERTY AS LOTS 8, 9, 16 AND 17 AND THE NORTH 25 FEET OF LOTS 7 AND 18, BLOCK 39, SEAL ROCK BEACH, IN THE CITY OF CANNON BEACH, COUNTY OF CLATSOP, STATE OF OREGON.

THE BASIS OF BEARINGS AND THE SUBJECT BOUNDARY SHOWN HEREON WERE ESTABLISHED BY RECORD OF SURVEY 2008-0108, CLATSOP COUNTY SURVEY RECORDS.

THE EXISTING HOUSES, FORMER UTILITIES AND PARKING FOR HOUSES SHOWN HEREON AND NOT REFERENCED TO DOCUMENT NO. 2014-01161 WERE ESTABLISHED FROM RECORD DATA FROM RECORD OF SURVEY 1998-0103, CLATSOP COUNTY SURVEY RECORDS. SAID RECORD DATA WAS FOUND TO BE OFFSET TO WEST OF THE WESTERLY RIGHT-OF-WAY LINE OF N. CALIFORNIA STREET. THE STAIRWAYS SHOWN HEREON AT NORTH 88°19'53" EAST 33.57 FEET WERE ASSUMED TO BE INTERIOR TO STATIC AS OF 8 FEET FROM SAID SURVEY RECORD AND SAID DOCUMENT NO. 2014-01161.

THE EXISTING ACCESS STAIRWAY WERE SHOWN HEREON AND ARE REFERENCED TO DOCUMENT NO. 2014-01161 WAS ESTABLISHED BY MEASUREMENT OF THE EXISTING STAIRWAY.

CLIENT: JEFFREY MCPHERSON

SURVEYOR'S CERTIFICATE:

I, TROY T. TETSUKA, HEREBY CERTIFY THAT I HAVE CORRECTLY SURVEYED AND MARKED WITH PROPER MONUMENTATION THE LANDS REPRESENTED ON THE ATTACHED SUBDIVISION PLAT, SAID LANDS BEING A REPLAT OF LOTS 8, 9, 16 AND 17, AND THE SOUTH 25 FEET OF LOTS 7 AND 18, BLOCK 39, SEAL ROCK BEACH, LOCATED IN THE NORTHEAST QUARTER OF SECTION 19, TOWNSHIP 5 NORTH, RANGE 10 WEST, WILLAMETTE MERIDIAN, IN THE CITY OF CANNON BEACH, CLATSOP COUNTY, OREGON, BEING MORE PARTICULARLY DESCRIBED AS FOLLOWS:

BEGINNING AT THE SOUTHWEST CORNER OF SAID LOT 18, BLOCK 39, SAID POINT BEING ON THE EASTERLY RIGHT-OF-WAY LINE OF ASH STREET (50 FEET WIDE) AND SAID POINT BEING MARKED BY A 5/8" IRON ROD WITH "TREE INC." THENCE ALONG SAID EASTERLY RIGHT-OF-WAY LINE NORTH 00°05'00" WEST 125.00 FEET, ONE NO. LEAVING SAID EASTERLY RIGHT-OF-WAY LINE NORTH 88°19'53" EAST 200.00 FEET TO THE WESTERLY RIGHT-OF-WAY LINE OF CALIFORNIA STREET (50 FEET WIDE); THENCE ALONG SAID WESTERLY RIGHT-OF-WAY LINE SOUTH 00°00'00" EAST 125.00 FEET TO THE SOUTHEAST CORNER OF SAID LOT 8; THENCE ALONG THE SOUTHERLY LINE OF SAID LOTS 8 AND 18, SOUTH 88°19'53" WEST 200.00 FEET TO THE POINT OF **BEGINNING**.

CONTAINING 25,000 SQUARE FEET OR 0.574 ACRES, MORE OR LESS.

NOTES:

1. COMMON OPEN SPACE EASEMENTS ARE HEREBY GRANTED FOR THE BENEFIT OF LOTS 1 THROUGH 6 OF THIS PLAT OF CANNON BEACH PRESERVATION. RIGHTS AND RESPONSIBILITIES ARE SPECIFIED WITHIN THE EASEMENT DOCUMENT "COMMON OPEN SPACE & COMMON ACCESS EASEMENT" RECORDED AS DOCUMENT NO. 2016-09087 CLATSOP COUNTY DEED RECORDS.

2. COMMON ACCESS EASEMENTS ARE HEREBY GRANTED FOR THE BENEFIT OF LOTS 1 THROUGH 6 OF THIS PLAT OF CANNON BEACH PRESERVATION. RIGHTS AND RESPONSIBILITIES ARE SPECIFIED WITHIN THE EASEMENT DOCUMENT "COMMON OPEN SPACE & COMMON ACCESS EASEMENT" RECORDED AS DOCUMENT NO. 2016-09087 CLATSOP CO. NOT ON THIS PLAT.

3. FUTURE STAIRWAY AND FUTURE ACCESS EASEMENT ARE FOR THE BENEFIT OF THE OWNERS OF LOTS 1 THROUGH 6 OF THIS PLAT OF CANNON BEACH PRESERVATION AND THE OWNER OF THAT TRACT OF LAND DESCRIBED AS LOT 18 AND THE NORTH 25 FEET OF LOT 18 BLOCK 39, SEAL ROCK BEACH. SAID STAIRWAY AND ACCESS EASEMENTS ARE SUBJECT TO THE TERMS AND CONDITIONS OF DOCUMENT NO. 2015-09028. NOT GRANTED ON THIS PLAT.

4. FUTURE PARKING EASEMENT IS FOR THE EXCLUSIVE BENEFIT OF THE OWNER OF THAT TRACT OF LAND DESCRIBED AS LOT 18 AND THE NORTH 25 FEET OF LOT 18 BLOCK 39, SEAL ROCK BEACH AND IS SUBJECT TO THE TERMS AND CONDITIONS OF DOCUMENT NO. 2015-09028. NOT GRANTED ON THIS PLAT.

REGISTERED PROFESSIONAL LAND SURVEYOR
OREGON
JUNE 30, 1997
TROY T. TETSUKA
2841
EXPIRES 6/30/16

kpff

SHEET 2 OF 2
JOB NO. 104398.10

121 SW 3rd Ave., Suite 2400
Portland, OR 97204
P: 503.227.3251
F: 503.224.4685
www.kpff.com

City of Cannon Beach
P.O. Box 368
163 E. Gower St.
Cannon Beach, OR 97110
503-436-2045
Fax: 503-436-8061

Building Permit

Residential 1 & 2 Fam Dwelling (New Only) Limited

Permit Number: 164-20-000055-DWL

IVR Number: 164017305965

Web Address: www.ci.cannon-beach.or.us

Email Address: building@ci.cannon-beach.or.us

Permit Issued: January 11, 2022

Application Date: August 14, 2020

TYPE OF WORK

Residential Specialty Code Edition: 2017

Category of Construction: Single Family Dwelling

Type of Work: New

Submitted Job Value: $300,000.00

Description of Work: New SFD / Harding Residence (Bovet)

JOB SITE INFORMATION

Worksite Address	Parcel		
534 N Laurel ST Cannon Beach, OR 97110	51019AD07002	**Owner:** **Address:**	JEAN PAUL BOUVET PO BOX 1386 CANNON BEACH, OR 97110
		Owner: **Address:**	JEAN PAUL BOUVET PO BOX 1386 CANNON BEACH, OR 97110

LICENSED PROFESSIONAL INFORMATION

Business Name	License	License Number	Phone
CAPPER CONSTRUCTION LLC - Primary	CCB	197706	503-436-2468

PENDING INSPECTIONS

Inspection	Inspection Group	Inspection Status
1999 Final Building	1_2 Famdwell	Pending

SCHEDULING INSPECTIONS

Various inspections are minimally required on each project and often dependent on the scope of work. Contact the issuing jurisdiction indicated on the permit to determine required inspections for this project.

Schedule or track inspections at www.buildingpermits.oregon.gov

Call or text the word "schedule" to 1-888-299-2821 use IVR number: 164017305965

Schedule using the Oregon ePermitting Inspection App, search "epermitting" in the app store

Permits expire if work is not started within 180 Days of issuance or if work is suspended for 180 Days or longer depending on the issuing agency's policy.

All provisions of laws and ordinances governing this type of work will be complied with whether specified herein or not. Granting of a permit does not presume to give authority to violate or cancel the provisions of any other state or local law regulating construction or the performance of construction.

ATTENTION: Oregon law requires you to follow rules adopted by the Oregon Utility Notification Center. Those rules are set forth in OAR 952-001-0010 through OAR 952-001-0090. You may obtain copies of the rules by calling the Center at (503) 232-1987.

All persons or entities performing work under this permit are required to be licensed unless exempted by ORS 701.010 (Structural/Mechanical), ORS 479.540 (Electrical), and ORS 693.010-020 (Plumbing).

PERMIT FEES

Fee Description	Quantity	Fee Amount
Clothes dryer exhaust	1	$41.00
Furnace - up to 100,000 BTU	1	$56.00
Gas fuel piping outlets	1	$23.00
Range hood/other kitchen equipment	1	$41.00
Ventilation fan connected to single duct	1	$28.00
Water heater	1	$41.00
Clothes washer	1	$28.00
Kitchens	1	$0.00
Single Family Residence - Baths	1	$360.00
Stormwater retention/detention tank/facility	1	$94.00
Water heater	1	$28.00
SDC - Water System Dev fee -- per dwelling unit equivalent, enter # dwl units	1	$1,630.93
SDC - Storm Drain System Dev fee - per dwelling unit equivalent, enter # dwl	1	$944.37
SDC - Sewer System Dev fee - per dwelling unit equivalent, enter # dwl units	1	$1,678.20
Structural building permit fee - New Res		$3,929.75
Structural plan review fee		$2,947.31
State of Oregon Surcharge - Plumb (12% of applicable fees)		$61.20
State of Oregon Surcharge - Bldg (12% of applicable fees)		$471.57
State of Oregon Surcharge - Mech (12% of applicable fees)		$27.60
Planning plan review - Residential Structures - $100,001 to $200,000	1	$159.00
Affordable Housing - Developer incentives (Res)		$1,440.00
Affordable Housing Construction Excise Tax - Admin Fee (Res)		$120.00
Affordable Housing - Programs and incentives (Res)		$1,008.00
Affordable Housing - Housing and community services (Res)		$432.00
	Total Fees:	$15,589.93

Note: This may not include all the fees required for this project.

VALUATION INFORMATION

Construction Type	Occupancy Type	Unit Amount	Unit	Unit Cost	Job Value
VB	R-3 1 & 2 family	600.00	Sq Ft	$122.46	$73,476.00
VB	U Utility, misc.	624.00	Sq Ft	$48.30	$30,139.20
VB	U Utility, misc. - half rate	794.00	Sq Ft	$24.15	$19,175.10
				Total Job Value:	$122,790.30

Electrical provided by Clatsop County Builiding Codes Division at 503-338-3697.

ADDITIONAL INFORMATION/CONDITIONS OF APPROVAL FOR PUBLIC WORKS

Date Applied: 09/10/2020

Comments: General: Under 12.36.030 of the City Code, a Right-of-Way Use Permit is required for placement or removal of any improvement within the public domain. Work in ROW will not occur on Saturdays, Sundays and after 12:01 p.m. on Fridays without P.W. Director's approval. Traffic control is to comply with the traffic signing requirements of the "Manual on Uniform Traffic Control Devices." All work shall be done in accordance with all applicable provisions of federal, state and local law, ordinance and administrative rules. All work in public right-of-way and all work which is connected, directly or indirectly, to the City of Cannon Beach's water, sanitary sewer, or storm sewer lines shall be constructed in accordance with applicable current APWA Oregon Chapter Standards. The City requires all wire utilities to be run underground where the improvement value exceeds 25% of the existing structure value (12.16.010). Contractor is to secure separate Right-of-Way Use Permit prior to work and submit utility schematics. Natural gas is to be coordinated with NW Natural Gas. Conformance: Water service will not be initiated without conformance with the following terms.

Driveway: 1. Stop concrete driveway at property line. Continue with gravel or asphalt to match city street. Driveway width cannot exceed 20' width.

Drainage: 1. MC 8.84.140 C – No owner or person in charge of property shall allow overflow water from a building to drain onto the property of another (Ord. 85-7 § 14). Homeowner is responsible for all cost associated with storm drainage runoff.

Misc: 1. CONFORMANCE WITH EROSION CONTROL PLAN IS IMPERATIVE. 2. All wire utilities must be run underground. No exceptions. Contractor is responsible for any damage done to City Row during construction. Tree protection must be maintained for the duration of project.

On-site sanitation: On-site portable restroom facility required during construction. On-site portable restroom must be positioned on homeowners property.

Sanitary Sewer: 1. Install 2-way cleanout at property line. Contractor will be sensitive digging sewer line to protect tree root system for adjacent trees.

Water: 1. A customer shut-off ball valve must be installed within three feet of the meter box. Valve must have corrosion-resistant handle and be readily accessible via a traffic rated box. Contractor will be sensitive digging water line to protect tree root system for adjacent trees.

Street: 1. Access frontage lot line(s) must be clearly delineated by certified survey staking. 2. Construction detritus/disturbance to the street must be corrected at the end of each work day.

Water and Sewer Connections 1. Contractor shall call the Assistant Public Works Director at (503) 436-8066 when they are ready for the City's water service to be installed. Installation of water meter will commence utility billing. 2. When contractor calls the City for water service installation, sewer service will also be installed.

ADDITIONAL INFORMATION/CONDITIONS OF APPROVAL FOR PLANNING

Date Applied: 01/10/2022

Comments: See Conditions & correspondence; elevation survey, setback survey
Arborist required on site during excavation, TPZ prior to building permit & hand excavation on north & east walls of garage.

NEW HOUSE PLANS FOR:

HARDING/BOVET RESIDENCE

CANNON BEACH, OREGON

ABBRV.

A.F.F.	Above Finish Floor	O.D.	Outside Diameter (Dim.)
ACOUST.	Acoustical	P.	Paint
A.C.T.	Acoustical Clg. Tile	PR.	Pair
ADJ.	Adjust. Adjustable	P.T.D.	Paper Towel Dispenser
AGG.	Aggregate	P.T.D./R	Paper Towel Disp & Receptacle
AL.	Aluminum	P.T.R.	Paper Towel Receptacle
A.B.	Anchor Bolt	PART.BD.	Particle Board
APPROX.	Approximately	PTN.	Partition
ARCH.	Architectural	PERF.	Perforated
A.D.	Area Drain	PLAS.	Plaster
ASPH.	Asphalt	P.LAM.	Plastic Laminate
A.C.	Asphaltic Concrete	PL.	Plate
BAL.	Beam	PWD.	Plywood
BITUM.	Bituminous	PT.	Point
BLK.	Block	P.P.	Power Pole
BLKG.	Blocking	PRCST.	Precast
BD.	Board	PREFIN.	Prefinished
BOT./BTM.	Bottom	P.T.	Pressure Treated
B.C.	Bottom of Curb	PL.	Property Line
B.W.	Bottom of Wall	Q.T.	Quarry Tile
BLDG.	Building	R.or RAD.	Radius
CAB.	Cabinet	REF.	Reference
C.P.T.	Carpet	REFR.	Refrigerator
C.I.	Cast Iron	REINF.	Reinforced
C.I.P.	Cast In Place	REQT.	Requirements
C.B.	Catch Basin	RES.	Resilient
CLG.	Ceiling	R.	Riser(s)
CEM.	Cement	R.D.	Roof Drain
CTR.	Center	RM.	Room
C.T.	Ceramic Tile	R.O.	Rough Opening
CLR.	Clear	S.GL.	Safety Glass
CLO.	Closet	S.N.D.	Sanitary Napkin Disposal
COL.	Column	SCHED.	Schedule
CONC.	Concrete	S.C.D.	Seat Cover Dispenser
CMU.	Conc. Masonry Units	SECT.	Section
COND.	Condition		Service Sink
CONSTR.	Construction	SHG.	Sheathing
CONT.	Continous	SHT.	Sheet
CONTR.	Contractor	SH.	Shelf
C.J.	Control Joint	SHR.	Shower
CORR.	Corridor	SIM.	Similar
CNTR.	Counter	S.O.G.	Slab on Grade
CTSK.	Countersink	S.D.	Soap Dispenser
DEPT.	Department	S.C.	Solid Core
DET.	Detail	SQ.	Square
DIA.	Diameter	S.F.	Square Feet
DIM.	Dimension	S.&V.	Stain and Varnish
DW.	Dishwasher	S.STL.	Stainless Steel
DISP.	Disposal (Garbage)	STD.	Standard
DR.	Door	STL.	Steel
DBL.	Double	STOR.	Storage
DN.	Down	STRL.	Structural
DS.	Downspout	SYM.	Symmetrical
DWR.	Drawer	SYS.	System
DWG.	Drawing	TEL.	Telephone
D.F.	Drinking Fountain	T.V.	Television
EA.	Each	THK.	Thick
E.S.	Each Side	TOIL.	Toilet
	Feet	T.P.D.	Toilet Paper Dispenser
E.W.C.	Electric Water Cooler	T&G	Tongue and Groove
ELEC.	Electrical	T.C.	Top of Curb
EL.	Elevation	T.P.	Top of Pavement
ELEV.	Elevator	T.Pl.	Top of Plate
EMER.	Emergency	T.W.	Top of Wall
ENCL.	Enclosure	T.	Treads
EQ.	Equal	TYP.	Typical
EQPT.	Equipment	UNF.	Unfinished
EXIST.	Existing	U.O.N.	Unless Otherwise Noted
EXP.	Expansion	UR.	Urinal
E.J.	Expansion Joint	V.P.	Veneer Plaster
EXPO.	Exposed	VFY.	Verify
EXT.	Exterior	V.G.	Vertical Grain
E.I.F.S.	Exterior Insulation & Finish System	VEST.	Vestibule
F.O.C.	Face of Concrete	V.C.T.	Vinyl Composition Tile
F.O.F.	Face of Finish	V.W.C.	Vinyl Wall Covering
F.O.M.	Face of Masonry	WSCT.	Wainscot
F.O.S.	Face of Studs	WC.	Wallcovering
F.FIN.	Factory Finish	W.C.	Water Closet
FIN.	Finish	W.H.	Water Heater
F.F.	Finish Floor	WP.	Waterproof
F.F.E.	Finish Floor Elevation	WT.	Weight
F.A.	Fire Alarm	W.	West
F.E.	Fire Extinguisher	WDW.	Window
F.E.C.	Fire Extinguisher Cab	W/	With
F.H.C.	Fire Hose Cabinet	W/O	Without
F.R.T.	Fire Retardant Treated	WD.	Wood
FPRF.	Fireproof	W.W.F.	Woven Wire Fabric
FIXT.	Fixture	&	And
F.B.	Flat Bar	∠	Angle
F.H.	Flat Head	@	At
FL.	Floor		Square/Square Foot
F.D.	Floor Drain		
F.P.H.B.	Freeze Proof Hose Bibb		
FT.	Foot or Feet		
FTG.	Footing		
FDN.	Foundation		
F.S.	Full Size, Scale		
F.O.I.C.	Furnished by Owner, Installed by Contractor		
FURR.	Furring		
FUT.	Future		
GALV.	Galvanized		
G.I.	Galvanized Iron		
G.D.	Garbage Disposal		
GA.	Gauge		
GLU-LAM.	Glu-Laminated		
GL.	Glass		
G.B.	Grab Bar		
GR.	Grade		
GND.	Ground		
GYP.BD.	Gypsum Wallboard		
GYP.BD./WR.	Water Resistant		
GYP.	Gypsum		
HDWE.	Hardware		
HT.	Height		
H.C.	Hollow Core		
H.C.P.	Hollow Core Plank		
H.M.	Hollow Metal		
HORIZ.	Horizontal		
H.B.	Hose Bibb		
HR.	Hour		
IN.	Inch(es)		
I.D.	Inside Diameter (Dim.)		
INSUL.	Insulation		
INT.	Interior		
JAN.	Janitor		
JT.	Joint		
K.D.	Kiln Dried		
KIT.	Kitchen		
K.DN.	Knock Down		
LAV.	Lavatory		
LT.	Light		
LKR.	Locker		
MACH.	Machine		
M.B.	Machine Bolt		
MH.	Manhole		
MFR.	Manufacturer		
M.O.	Masonry Opening		
MAX.	Maximum		
MECH.	Mechanical		
M.C.	Medicine Cabinet		
MDO.	Medium Density Overlay		
MEMB.	Membrane		
MET.	Metal		
MIN.	Minimum		
MISC.	Miscellaneous		
MTD.	Mounted		
MUL.	Mullion		
NOM.	Nominal		
N.	North		
N.I.C.	Not in Contract		
N.T.S.	Not to Scale		
NO.	Number		
OBS.	Obscure		
O.C.	On Center		
OPNG.	Opening		
OPP.	Opposite		
O.H.	Opposite Hand		
OZ.	Ounce		

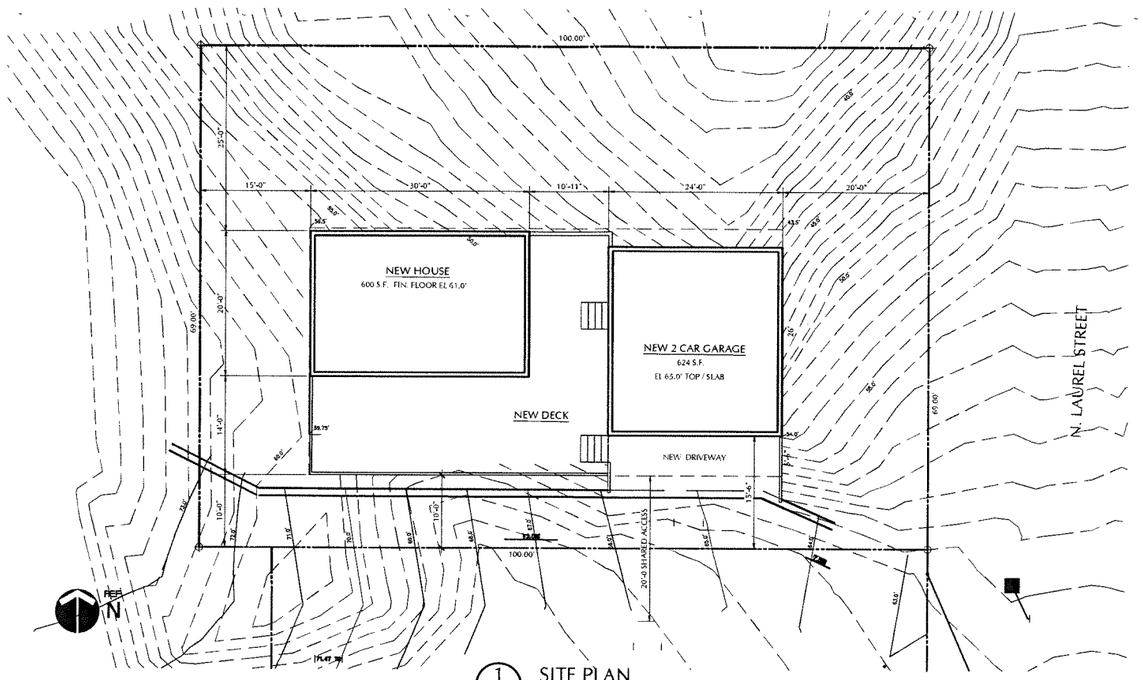

1 CS SITE PLAN
1/8" = 1'-0"

GENERAL NOTES

1. THE CONTRACTOR(S) SHALL PERFORM ALL DEMOLITION AND FURNISH/INSTALL ALL MATERIALS/SERVICES NECESSARY TO COMPLETE THE WORK SHOWN ON THE DRAWINGS UNLESS NOTED OTHERWISE.
2. WORK SHALL BE IN ACCORDANCE WITH REQUIREMENTS OF CURRENT IBC, STATE OF OREGON STRUCTURAL SPECIALTY CODE AND FIRE ADN LIFE SAFETY REGULATIONS, LAW OF THE STATE FIRE MARSHAL, APPLICABLE PLUMBING MECHANICAL, ELECTRICAL CODES AND OTHER APPLICABLE CODES AND ORDINANCES.
3. THE CONTRACTOR(S) SHALL OBTAIN AND PAY FOR INSPECTIONS BY CITY OF CANNON BEACH BUILDING DEPARTMENT.
4. NO FITAL PAYMENT SHALL BE ISSUED UNTIL THE CONTRACTOR DELIVERS TO OWNER A CERTIFICATE OF COMPLIANCE/OCCUPANCY.
5. CONTRACTOR SHALL COORDINATE ALL SUBCONTRACTOR WORK.
6. CONTRACTOR SHALL PROVIDE ON SITE SUPERVISION DURING ALL WORK.
7. ALL EXISTING CONDITIONS SHALL BE VERIFIED DURING CONSTRUCTION
8. BEFORE ORDERING ANY MATERIAL OR DOING ANY WORK, THE CONTRACTOR SHALL VERIFY IN THE FIELD ALL DIMENSIONS AND ELEVATIONS WHICH ARE REQUIRED FOR CONNECTIONS TO, OR INSTALLATION IN, AREAS COVERED BY DOCUMENTS. CONTRACTOR SHALL NOTIFY THE ARCHITECT OF ANY DISCREPANCY ON THE PLANS OR THE SITE.

DRAWING INDEX

CS	COVER SHEET - SITE PLAN				
A0.0	SPECIFICATIONS				
A0.1	TREE PROTECTION PLAN				
A1.1	MAIN FLOOR PLAN				
A1.2	ATTIC FLOOR PLAN				
A2.1	ELEVATIONS				
A2.2	ELEVATIONS				
A3.1	SECTIONS				
A5.1	WINDOW SEQUENCE				
S1.1	FOUNDATION PLAN				
S2.1	FLOOR FRAMING PLAN				
S3.1	ROOF FRAMING PLAN				

PROJECT TEAM

OWNER:
PAUL BOVET
CANNON BEACH, OREGON

ARCHITECT:
TOLOVANA ARCHITECT LLC 503-436-0519
368 ELK CREEK ROAD, SUITE 408, CANNON BEACH, OREGON 97110
MAIL P.O. BOX 648, TOLOVANA PARK, OREGON 97145
DAVID VONADA, A.I.A. DAVID@TOLOVANAARCHITECTS.COM

STRUCTURAL CONSULTANT,
TIM WOLDEN S.C.
34930 HWY 53
NEHALEM, OREGON 97131 503-368-7962
TIM WOLDEN, S.C. TIM@WOLDENSE.COM

CONTRACTOR:
CAPPER CONSTRUCTION, LLC 503-440-0194

BUILDING STATISTICS

JURISDICTIONS:		CITY OF CANNON BEACH OREGON
ZONING:		R1
OCCUPANCY GROUP		R-3, SINGLE FAMILY RES
BUILDING CONSTRUCTION TYPE		V-B
FIRE SPRINKLERS		NO
BUILDING AREA:		
LIVING AREA	APPROX.	600 S.F.
GARAGE AREA	APPROX.	624 S.F.
TOTAL FLOOR AREA:	APPROX.	1,224 S.F.
TOTAL LOT AREA:		6,900 SQ. FT.
ALLOWABLE HEIGHT		+ 28'-0"

SYMBOLS LEGEND

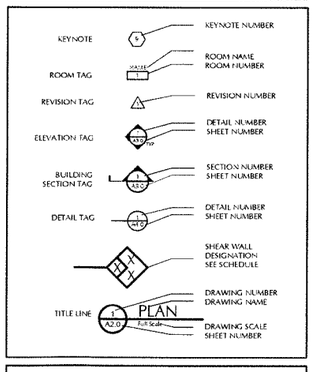

INSULATION TABLE

Per 2017 Oregon Residential Energy Code - Table 101101.1(1)

New Windows & Sliding Glass Doors	U = 0.30
Exterior Doors (Max. 28 s.f. of Exterior Door per Dwelling Unit can have U = 0.54 or less)	U = 0.20
Exterior Door w/ > 2.5 s.f. Glazing	U = 0.40
Wall Insulation - Above Grade *Including Cripple Walls & Rim Joist Areas	U = 0.059 / R-21 Intermediate
Wall Insulation - Below Grade	C = 0.063 , R-15/R-21
Underfloor Insulation	U = 0.033 / R-30
Flat Ceiling Insulation	U = 0.021 / R-49
Vaulted Ceiling Insulation (Vaulted ceiling surface area exceeding 50% of the total heated floor space shall have U = 0.026 or less / R-38.)	U = 0.033 R-30 Rafter or R-30A Scissor Truss
Forced Air Duct Insulation	R - 8
Skylights	U = 0.50
Slab Edge Perimeter	F = 0.520 / R-15
Heated Slab Interior	R-10
Acoustical Insulation	4" mineral wool

Note: All new insulation at perimeter of building envelope to have 1 perm vapor retarder on warm side.

REGISTERED ARCHITECT STATE OF OREGON

Tolovana Architect LLC
368 Elk Creek Rd. Suite 408
Cannon Beach, Oregon 97110

PERMIT SET

HOUSE PLANS FOR:
HARDING
BOVET RESIDENCE
CANNON BEACH OREGON

MARK	DATE	DESCRIPTION

DATE: 5-31-21
JOB:
FILE:
DRAWN:
CHECKED:

COPYRIGHT
TOLOVANA ARCHITECTS, LLC
2020

COVER PAGE

CS

Plotted on Jun 23, 2021 - 11:34am
Xrefs: ale pbm ... 24x36 title block
S:\Bovet_2021\ACAD\SHEET SETS\

BOUVET RESIDENCE LOT 4 NICHOLSON PLANNED DEVELOPMENT

GENERAL REQUIREMENTS

A. Construction Type: Wood framed Type V B

B. Occupancy Group: R-3

C. Foundation System: Reinforced concrete.

D. Construction to meet local and State codes:

E. OSSC (Building Code latest edition)

F. International Residential Code

G. NFPA

H. OSHA

I. Mechanical Code

J. Electrical Code

DELEGATED DESIGN REQUIREMENTS

A. Delegated Design Engineered Components: Delegated Design Engineered components known at this time to require structural review and submittal:

B. Wood I Joists

C. Plumbing Systems

D. Mechanical Systems

E. Electrical Systems

F. Fire Detection and Alarm

G. Design drawings and structural calculations to bear seal and signature of licensed Professional Engineer in State which project is located.

QUALITY REQUIREMENTS

A. Scope:

B. Quality control services include inspections, tests, and related actions, including reports performed by Contractor, by independent agencies, and by governing authorities. Requirements do not include Contract enforcement activities performed by Architect.

C. Perform Field Test on Mock-up when elected by Owner.

D. Comply with requirements of 2010 Oregon Structural Specialty Code.

E. See Structural Notes

TEMPORARY TREE AND PLANT PROTECTION

A. Protect existing trees to remain on or near project site from damage due to construction activities. See sheet AS-1.1

SELECTIVE DEMOLITION AND EXCAVATION

A. Salvage and recycling all materials as feasible.

B. Protect all public utilities from damage due to construction activities.

CAST-IN-PLACE CONCRETE

A. Provide foundation walls and footings as indicated on drawing, Structural Notes, and detail drawings.

B. Formwork: Any standard products with sufficient strength to withstand hydrostatic head without distortion in excess of permitted tolerances.

C. Standard Reinforcing Bars: ASTM A 615/A 615M, Grade 60.

D. Galvanizing: ASTM A767/A 767M, Class I.

E. Epoxy Coating: ASTM A 775/A 775M.

F. Weldable Reinforcing Bars: ASTM A 706/A 706M, deformed low-alloy steel bars.

G. Weldable Steel Mat: ASTM A 704/A 704M, using ASTM 615/A 615M Grade 60 steel bars or rods,unfinished.

H. Stirrup Steel: ASTM A 82 steel wire, finish matching reinforcing bars.

I. Fabrication of Reinforcement: Comply with ACI SP-66.

J. Cement: ASTM C 150, Type I - Normal.

K. Normal Weight Aggregates: ASTM C 33

L. Fiber Reinforcement: Alkai-resistant glass fiber; ½-inch length.

M. Water: Clean and not detrimental to concrete.

N. Normal Weight Concrete: Proportions in compliance with ACI 211.1, recommendations

O. Establish required average strength for each type of concrete based on field experience or trial mixtures, as specified in ACI 301.

P. Strength: Minimum 3,000 PSI unless noted otherwise in Structural Notes.

P. Strength: Minimum 3,000 PSI unless noted otherwise in Structural Notes.

Q. Allowable Slump: 5-inches unless noted otherwise in Structural Notes.

PLACING AND FINISHING CONCRETE:

A. Place concrete in accordance with ACI 304R.

B. Place and finish concrete for floor slabs in accordance with ACI 302.1R

C. Do not interrupt successive placement; do not permit cold joints to occur.

ROUGH CARPENTRY

A. Lumber Standards:

B. Comply with PS 20 and grading rules of West Coast Lumber Inspection Bureau (WCLB), Western Wood Products Association (WWPA).

C. Provide dressed lumber, S4S, unless rough lumber is specifically indicated.

D. Moisture content 19 percent maximum, except as otherwise indicated for particular members.

E. Concealed Dimension Lumber Studs: Douglas fir-larch, Douglas fir, or hem-fir. No. 2.

F. Joists, Rafters, Posts, and Small Beams (Sizes Up to 4 x 16):

G. Machine stress-rated (MSR) as follows:

(1) Minimum Extreme Fiber Stress in Bending (Fb): 1350 psi.

(2) Minimum Modulus of Elasticity (E): 1,300 ksi.

H. Douglas fir-larch, Douglas fir, or hem-fir, no. 2.

I. Exposed Dimension Lumber:

J. Studs: Provide Douglas fir-larch, douglas fir, hem-fir, no. 2 preservative-treated.

K. Joists, Rafters, Posts, and Small Beams (Sizes Up to 4 x 16):

L. Species: Provide Douglas fir-larch, douglas fir, hem-fir, no. 2 preservative-treated.

M. Subfloor/Underlayment Combination: APA Rated Sturd-I-Floor; Exposure Class Exterior; span rating of 16 in on center; tongue and groove edges.

N. APA Rated Subflooring: Exposure Class Exterior; span rating of 32/16 in.

O. Particleboard Subflooring: ANSI A208.1, Grade M-2 exterior glue waterboard; ½ in thickness, square edge.

P. APA Rated Roof Sheathing: Exposure Class Exterior, Structural I; span rating of 24/0 in.

Q. APA Rated Wall Sheathing: Exposure Class Exterior. Structural I, span rating of 24/0 in.

R. Joist Hangers: Hot dipped galvanized steel, G185 - interior. Type 304 stainless steel or ZMAX - exterior.

S. Wood Treatment: Comply with AWPA U1.

T. Fire Retardancy: Pressure impregnated chemical treatment; Use Category UCFA for interior, UCFB for exterior. Where noted.

U. Preservative Pressure Treatment: Borate preservative.

V. Treat furring in rainscreen system. Where noted.

W. Preservative Pressure Treatment: AWPA Use Category UC3B, Commodity Specification A (Treatment C2) using waterborne preservative to 0.25 lb/cu ft retention. CCA or ACQ.

X. Pressure treat cants, nailers, blocking, curbs, equipment support bases, stripping and similar items in association with roofing and flashing.

WOOD I JOISTS

A. Wood chord and plywood web "I" joists for floor / roof framing engineered by contractors supplier.

B. Manufacturer: Wood "I" joists by Weyerhaeuser or Boise Cascade.

GLUE-LAMINATED BEAMS

A. Glue-laminated beams.

B. Appearance Grade: Industrial unless otherwise noted.

C. Comply with ANSI/AITC A190.1.

D. Combination Symbol: 24-F-X4 DF/DF at simple spans and 24-F-V8 DF/DF at multiple and cantilever spans, conforming to WWPA grading rules with 12 percent maximum moisture content before fabrication.

E. Adhesive: Wet use

Exterior Architectural woodwork

A. Scope: Exterior standing and running trim.

B. Wood Species: Western Red Cedar. Select Structural Western Red Cedar.

C. Appearance: Resawn

INTERIOR ARCHITECTURAL WOODWORK

A. Scope: Custom fabricated woodwork.

B. Standards: Comply with AWI Custom quality standards.

C. Finish: as selected by Owner.

D. Wood Species: As selected by Owner

BITUMINOUS DAMPPROOFING

A. Scope: Cold-applied asphalt emulsion dampproofing as indicated on drawings.

B. Cold-Applied Asphalt Dampproofing Mastic: Asphalt roof cement complying with ASTM D 4586, Type I.

C. MATERIALS: BITUMINOUS DAMPPROOFING. COMPLY WITH ASTM D1227, TYPE III OR IV. Manufacturers: Chem Rex Inc, Karnak Chemical Corporation, W.R. Meadows Inc., or approved.

THERMAL PROTECTION

A. GLASS-FIBER, ASTM C 665, TYPE III, CLASS B, WITH KRAFT VAPOR RETARDER.

C. Faced Batt Insulation: R-VALUE: AS SCHEDULED ON DRAWINGS. MAXIMUM 1.0 PERMEABILITY.

FOAMED-IN-PLACE INSULATION

BASF Polyurethane Foam Enterprises LLC: www.foamenterprises.com, BIOBASED SYSTEMS, LLC: PRODUCT: BIOBASED 501; WWW.BIOBASED.NET, DEMILEC USA: PRODUCT: SEALECTION 500: WWW.SEALECTION500.COM

BUILDING PAPER WEATHER BARRIERS

A. ASPHALT SATURATED FELT, NON-PERFORATED BREATHER TYPE PAPER: ASTM D226, TYPE I, GRADE D, STYLE 2. TWO PLY JUMBOTEX.

B. Fortifiber Building Systems Group: Product: Super Jumbo Tex: www.fortifiber.com. Or approved

C. Water Hold Out: ASTM D-779; 60 minutes.

D. Vapor Permeability: ASTM E96, 11 grams.

E. Tensile Strength: ASTM D-828; MD=70 lb f/inch and CD=60 lb f/inch.

F. Sealant: Molstop Sealant or type approved by manufacturer for application.

G. Sealing Tape: Type recommended by manufacturer.

H. Fasteners: Galvanized nails or screws with large heads or plastic washer heads.

SELF-ADHERED MEMBRANE FLASHING

A. Sheet Membrane Flashing:

B. Locations: Opening penetrations and as indicated:

C. General:

(1) Reinforced polyethylene-faced, rubberized, self-adhesive membrane.

(2) Thickness: 25 mils. Includes removable release film protecting adhesive surface.

D. Manufacturers:

(1) Henry Company; Product: BlueSkin TWF; www.henry.com.

(2) International Building Components; Product WaterBlock - 40: www.waterblocksystems.com.

(3) Fortifiber Building Systems Group, FortiFlash; www.fortifiber.com

E. Surface Conditioners/Primers: High-tack SBS rubber based primer or as recommended by manufacturer.

F. Fasteners: Stainless steel.

G. Detailing Compounds: Liquid membrane, 1 or 2 component sealants or mastics supplied by membrane manufacturer intended for detailing around penetrations and at lapped seams.

WOOD SIDEWALL SHINGLES

A. Sidewall shingles manuf. by Cedar Shingle Bureau, Certi-Sawn Tapersaw Shakes

B. Wood Shingles: Western Red Cedar. CSSB No.1 Grade, Blue Label. Member mill.

C. Size: 16 inches long.

D. Exposure: 2" and 6" double course unless otherwise noted.

E. Pressure fire retardant treated, Class C, where required.

F. Nails: Standard round wire shingle type, stainless steel or hot-dipped zinc coated steel, of sufficient length to penetrate through wall sheathing.

G. Metal Flashings: Provide stainless steel sheet metal dormer flashing, and other flashing as indicated.

COMPOSITION ROOF SHINGLES

A. Composition roof shingles manuf. by IKO - Certainteed EQ alt.

B. Composition Shingles: Dynasty or Cambridge Architectural. Color as selected by Owner. Min 30yr warranty

C. Design Wind Speed: 130 mph

D. Exposure On Roofs: Not more than that recommended by Manuf. for roof slope and type of underlayment used.

E. Ridge and Hip Caps: Prefabricated lapped single ply units of matching quality and thickness.

F. Valleys: Open, with shingles cut for straight edge.

G. Roofing Membrane: All roofs to have full ice/water self adhered membrane.

H. Nails: Standard round wire shingle type, aluminum or hot-dipped zinc coated steel, of sufficient length to penetrate through roof sheathing or ¾ inch into roof sheathing or decking.

I. Plastic Cement: ASTM D 4586, asphalt roof cement.

J. Ridge Vents: Per roofing selected

K. Metal Flashings: Provide stainless steel sheet metal eave edge, gable edge, ridge, open valley flashing, dormer flashing, and other flashing indicated.

L. Bituminous Paint: Acid and alkali resistant type; black color

SHEET METAL FLASHING AND TRIM

A. Stainless Steel Sheet: ASTM A 666, Type 304.

B. Medium Weight: 0.015 inch thick

C. Copings, Fascia and exposed Trim: stainless steel medium weight specified above.

D. Joints: Sealed with sealant; interlocking seams providing movement at maximum 10 feet on center.

JOINT SEALERS

A. Silicone Sealant:Single-component, non-sag, joint movement range 50-100 percent in extension and 50 percent in compression.Dow Corning 790 or 795

B. Polyurethane Sealant:Two-component, non-sag, joint movement range 50 percent in extension and compression:Mameco Vulkem 922, Pecora Dynatrol II, Sonolastic NP2, Tremco 511

C. Foam Air-Infiltration Sealant: Grace Polycel One, DAP Kwik Foam, Silicone Rubber Sealant: Single-component, architectural grade. Dow Corning 786, Tremco Proglaze

D. At openings and joints in exterior walls: Silicone sealant.

E. At opening and joints in interior walls: Polyurethane sealant.

F. At electrical boxes and exterior walls where insulation is interrupted: Foam air-infiltration sealant.

G. At toilet fixture joints: Silicone rubber sealant.

H. Warranty: 5-years.

WOOD DOORS

A. Interior Doors:

B. Type: Per door schedule.

C. Style & material: Per door schedule.

D. Construction:

E. Units: Solid core wood.

F. Interior Wood Frames:

G. Material: Hem Fir

H. Finish: As selected by Owner.

VINYL WINDOWS

A. Manufacturer: Milgard

B. As selected by Owner. Frames white in color

C. Screens: Fiberglass.

D. Glazing: Dual pane - low E.

E. Argon filled air space.

F. Interior wood to be finished per owner

GYPSUM BOARD ASSEMBLIES

A. Minimum Panel Thickness: ½-inch.

B. Face Panels: ASTM C 36.

C. W.R. Backing Panels: ASTM C 630, Standard and Type X.

D. Cementitious Backer Units (Cement Board): ANSI A118.9.

E. Minimum Wall Panel Thickness: ½-inch.

F. Tile Backer Board: Glass-Mat Water Resistant Gypsum Tile Backer per ASTM 1178, 5/8 inch thick.

G. Outside Corner Trim: Galvanized steel or PVC.

H. Panel Edge Trim: Galvanized steel or PVC.

I. 16 to 20 Gage Framing Screws: Type S, Bugle Head.

J. Wall Insulation Thickness: 3 inches.

K. Gypsum Board Panels Finish: Level of finish per Northwest Wall and Ceiling Bureau.

L. Concealed areas: Level 1.

M. At substrate for tile: Level 2.

N. Painted walls and ceilings: Level 4.

FIRE PROTECTION SPECIALTIES

A. Provide smoke detector and CO2 systems as required by Code.

RESIDENTIAL CASEWORK

A. AWI Custom Grade

B. Hinges: Concealed

C. Hinges & Pulls: As selected by Owner

D. Provide sample for approval by owner.

EXCAVATION

A. Scope:

B. Provide rough grading for foundation and finished grading as shown on drawings.

C. Stockpile spoils on-site as directed by owner.

EROSION AND SEDIMENTATION CONTROL

A. Scope: Provide means to control of containment of erosion and sediment materials on site.

SITE SANITARY UTILITY SEWERAGE PIPING

A. Protect existing system from damage during construction activities.

SITE STORM UTILITY DRAINAGE PIPING

A. Make connection to existing.

FOUNDATION DRAINAGE

A. Continuous perforated perimeter footing drain line at exterior base of foundation wall. Connect to storm drain.

Plotted on Jun 23, 2021 - 11:34am
Xrefs: xr_24x36_title block
S:\Bouvet_2021\ACAD\SHEET SETS\

REGISTERED ARCHITECT
STATE OF OREGON

Tolovana Architect LLC
368 Elk Creek Rd. Suite 408
Cannon Beach, Oregon 97110

PERMIT SET

HOUSE PLANS FOR:
HARDING
BOVET RESIDENCE
CANNON BEACH OREGON

MARK	DATE	DESCRIPTION

DATE: 5-31-21
JOB:
FILE:
DRAWN:
CHECKED:

COPYRIGHT
TOLOVANA ARCHITECTS, LLC
2020

SPECIFICATIONS

A0.0

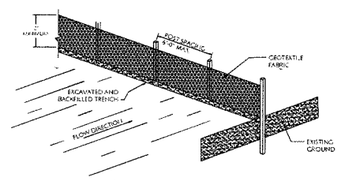

ISOMETRIC VIEW

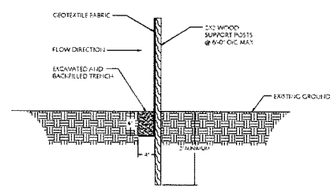

TYPICAL SECTION

SILT FENCE DETAIL
NO SCALE

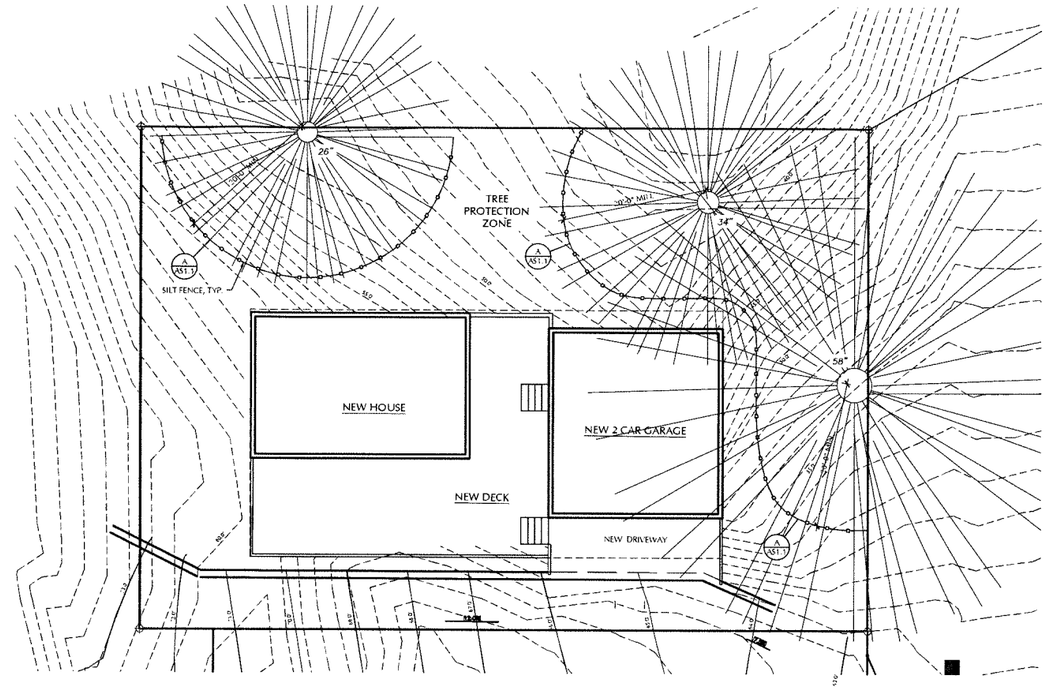

1 AS1.1 TREE PROTECTION PLAN
1/8" = 1'-0"

Plotted on Jun 23, 2021 - 11:34pm
Style: site plan
S:\Revit_2020\Jobs\SHEET SETS\

REGISTERED ARCHITECT STATE OF OREGON

Tolovana Architect LLC
368 Elk Creek Rd. Suite 408
Cannon Beach, Oregon 97110

PERMIT SET

HOUSE PLANS FOR:
HARDING
BOVET RESIDENCE
CANNON BEACH OREGON

MARK	DATE	DESCRIPTION

DATE: 5-31-21
JOB:
FILE:
DRAWN:
CHECKED:

COPYRIGHT
TOLOVANA ARCHITECTS, LLC
2020

TREE PROTECTION PLAN

2

AS1.1

ELECTRICAL LEGEND

- EXHAUST VENT TO OUT SIDE
- ELECTRICAL WIRING
- CARBON MONOXIDE & SMOKE DETECTOR
- LIGHT & EXHAUST FAN VENTING TO OUT SIDE
- 2 GANG WATER PROOF OUTLET OUT SIDE
- 2 GANG GFI OUTLET
- 2 GANG OUTLET
- 4 GANG OUTLET
- APPLIANCE OUTLET
- APPLIANCE OUTLET
- TELEPHONE
- CABLE OR SAT LOCATION
- GARAGE EXTERIOR SWITCH
- 4 WAY SWITCH
- 3 WAY SWITCH
- SINGLE LIGHT SWITCH
- LED RECESSED LIGHT
- LED PENDANT LIGHT
- LED CHANDELIER
- LED SURFACE SOURCE
- CEILING FAN & LED LIGHT COMBINATION

HOLD DOWNS

(1) - HDU5 W/ SSTB20 ANCHOR @ (2) LOCATIONS

(2) - HDU8 W/ SSTB28 ANCHOR @ (4) LOCATIONS

VERT. STRAPPING

(3) - MSTI60 VERT. STRAPS CENTER ON FLOOR RIM JOIST, NAIL TO DBL. STUDS

STRAPPING @ WINDOWS

(*) - CS16 STRAPS @ HDR. & SILL, EXTEND 24" PAST OPENING, NAIL TO FLAT BLOCKING BETWEEN STUDS

SHEAR WALLS

ALL WALLS FULLY BLOCKED @ PANEL EDGES. SHEARWALL NAILING: 8d @ 6" O.C. UNLESS OTHERWISE NOTED.

(A) - SHEARWALL NAILING: 8d @ 4" O.C. @ PANEL EDGES

(B) - SHEARWALL NAILING: 8d @ 3" O.C. @ PANEL EDGES USE DBL. STUDS @ DBL. SIDED SHEARWALLS

(C) - SHEARWALL NAILING: 10d @ 3" O.C. @ PANEL EDGES

WALL LEGEND

- NEW INTERIOR WALL: 2X4 @ 16" O.C.
- NEW EXTERIOR WALL: 2X6 @ 16" O.C.
- PARTIAL HEIGHT WALL
- SINGLE SHEARWALL: 2X6 @ 16" O/C
- DOUBLE SHEARWALL: 2X6 @ 16" O/C

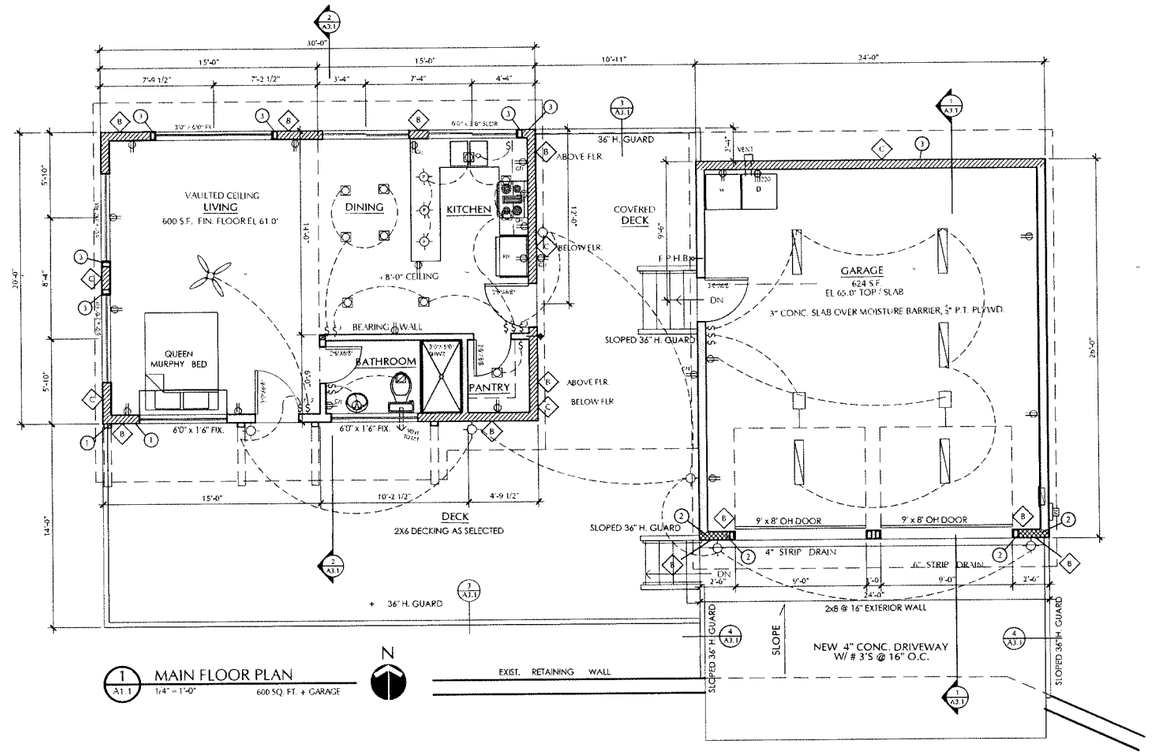

1 / A1.1 MAIN FLOOR PLAN
1/4" = 1'-0"
600 SQ. FT. + GARAGE

REGISTERED ARCHITECT STATE OF OREGON

Tolovana Architect LLC
368 Elk Creek Rd. Suite 408
Cannon Beach, Oregon 97110

PERMIT SET

HOUSE PLANS FOR:
HARDING
BOVET RESIDENCE
CANNON BEACH OREGON

MARK	DATE	DESCRIPTION

DATE: 5-31-21
JOB:
FILE:
DRAWN:
CHECKED:

COPYRIGHT
TOLOVANA ARCHITECTS, LLC
2020

MAIN FLOOR PLAN

A1.1

Plotted on Jun 23, 2021 - 11:34am
Keep: XR_PP1 Hide: Title block
S:\Bovet_2021\ACAD\SHEET SETS\

ELECTRICAL LEGEND

- EXHAUST VENT TO OUT SIDE
- ELECTRICAL WIRING
- CARBON MONOXIDE & SMOKE DETECTOR
- LIGHT & EXHAUST FAN VENTING TO OUT SIDE
- 2 GANG WATER PROOF OUTLET (OUT SIDE)
- 2 GANG GFI OUTLET
- 2 GANG OUTLET
- 4 GANG OUTLET
- APPLIANCE OUTLET
- APPLIANCE OUTLET
- TELEPHONE
- CABLE OR SAT LOCATION
- GARBAGE DISPOSAL SWITCH
- 4 WAY SWITCH
- 3 WAY SWITCH
- SINGLE LIGHT SWITCH
- LED RECESSED LIGHT
- LED PENDANT LIGHT
- LED CHANDELIER
- LED SURFACE SCONCE
- CEILING FAN & LED LIGHT COMBINATION

HOLD DOWNS

(1) - HDU5 W/ SSTB20 ANCHOR @ (2) LOCATIONS

(2) - HDU8 W/ SSTB28 ANCHOR @ (4) LOCATIONS

VERT. STRAPPING

(1) - MSTA9 VERT. STRAPS CENTER ON FLOOR RIM JOIST, NAIL TO DBL. STUDS

STRAPPING @ WINDOWS

(*) - CS18 STRAPS @ HDR. & SILL, EXTEND 24" PAST OPENING, NAIL TO FLAT BLOCKING BETWEEN STUDS

SHEAR WALLS

ALL WALLS FULLY BLOCKED @ PANEL EDGES. SHEARWALL NAILING: 8d @ 6" O.C. UNLESS OTHERWISE NOTED.

(A) - SHEARWALL NAILING: 8d @ 4" O.C. @ PANEL EDGES

(B) - SHEARWALL NAILING: 8d @ 3" O.C. @ PANEL EDGES USE DBL. STUDS @ DBL. SIDED SHEARWALLS

(C) - SHEARWALL NAILING: 10d @ 3" O.C. @ PANEL EDGES

WALL LEGEND

- NEW INTERIOR WALL: 2X4 @ 16" O.C.
- NEW EXTERIOR WALL: 2X6 @ 16" O.C.
- PARTIAL HEIGHT WALL
- SINGLE SHEARWALL: 2X6 @ 16" O/C
- DOUBLE SHEARWALL: 2X6 @ 16" O/C

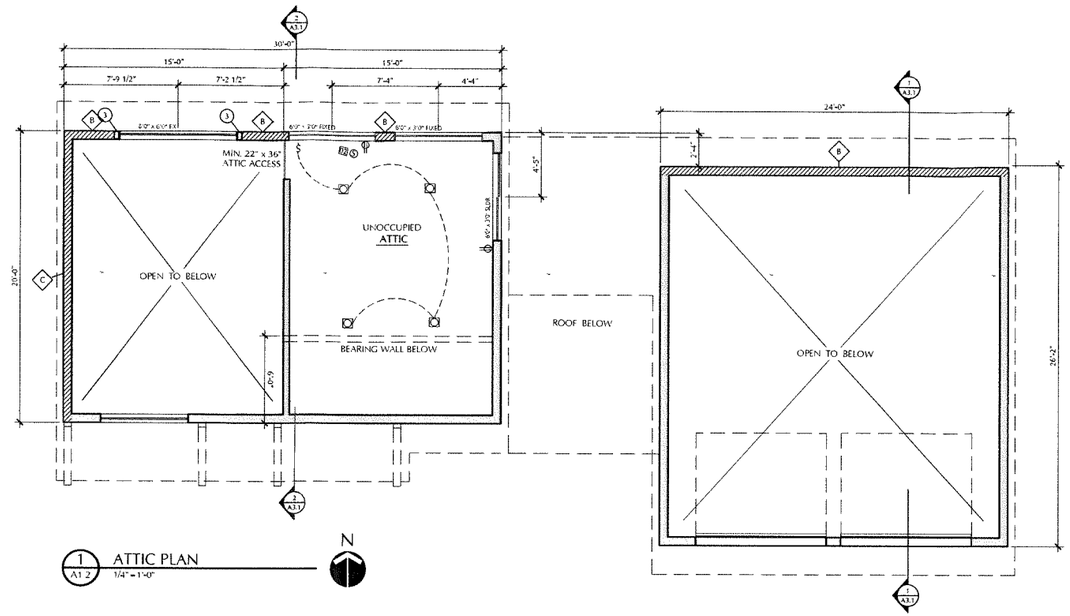

1 / A1.2 ATTIC PLAN
1/4" = 1'-0"

Tolovana Architect LLC
368 Elk Creek Rd. Suite 408
Cannon Beach, Oregon 97110

PERMIT SET

HOUSE PLANS FOR:
HARDING
BOVET RESIDENCE
CANNON BEACH OREGON

MARK	DATE	DESCRIPTION

DATE: 5-31-21
JOB
FILE:
DRAWN:
CHECKED

COPYRIGHT
TOLOVANA ARCHITECTS, LLC
2020

ATTIC
FLOOR PLAN

A1.2

Plotted on Jun 23, 2021 - 11:25am
Style: xR_PP1 xr_24x36 title block
S:\Bovet_2021\CAD\SHEET SETS\

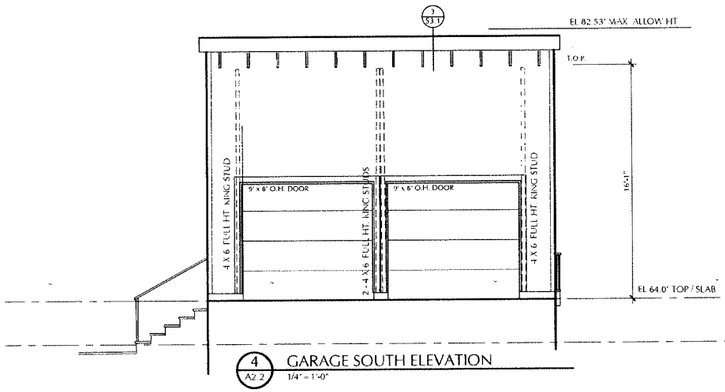

4 A2.2 GARAGE SOUTH ELEVATION
1/4" = 1'-0"

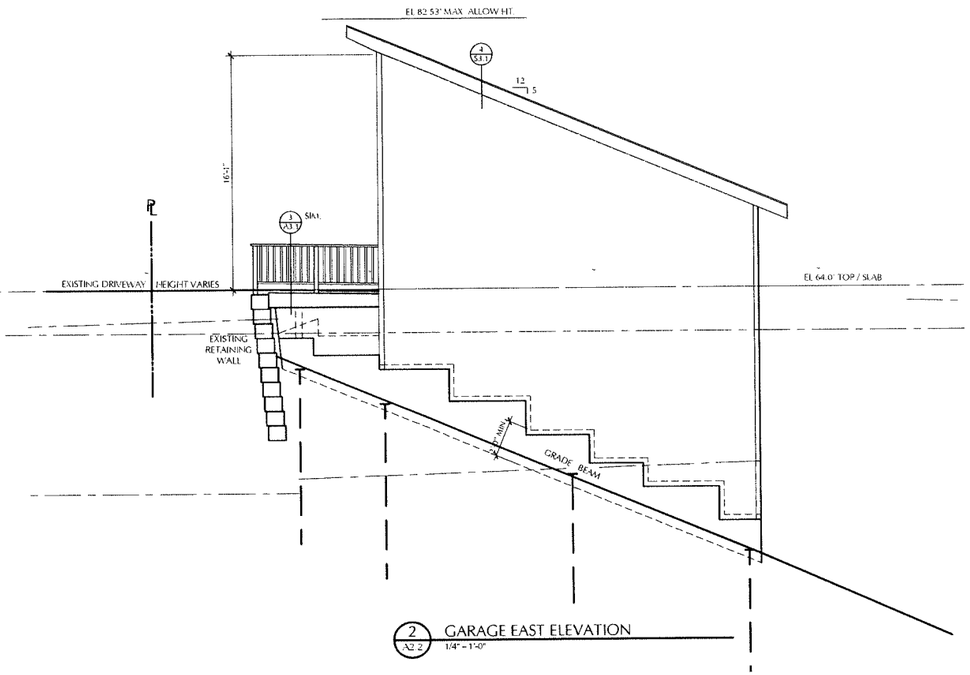

2 A2.2 GARAGE EAST ELEVATION
1/4" = 1'-0"

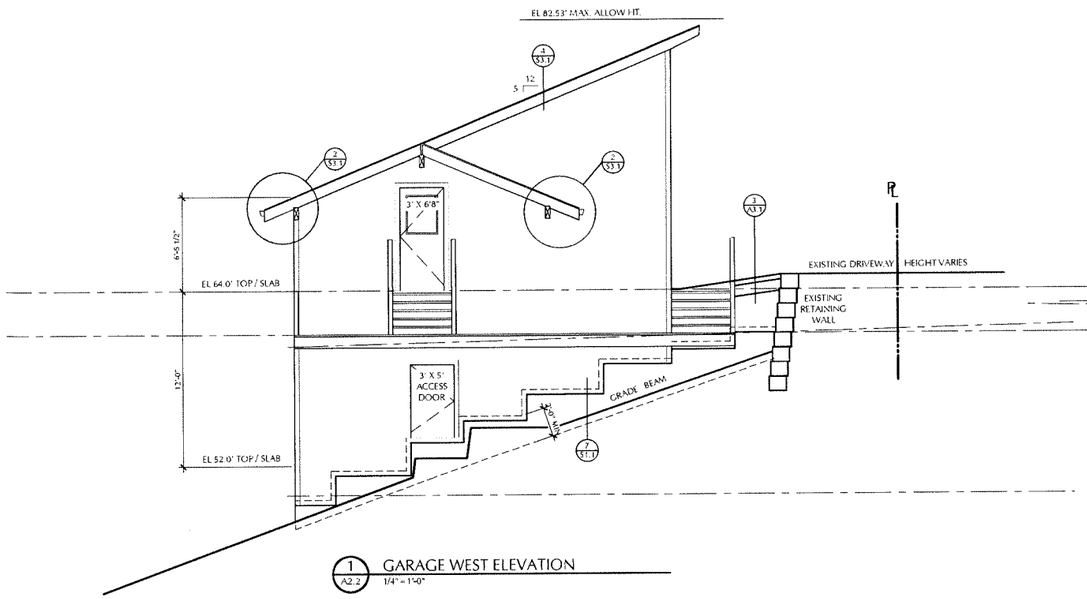

1 A2.2 GARAGE WEST ELEVATION
1/4" = 1'-0"

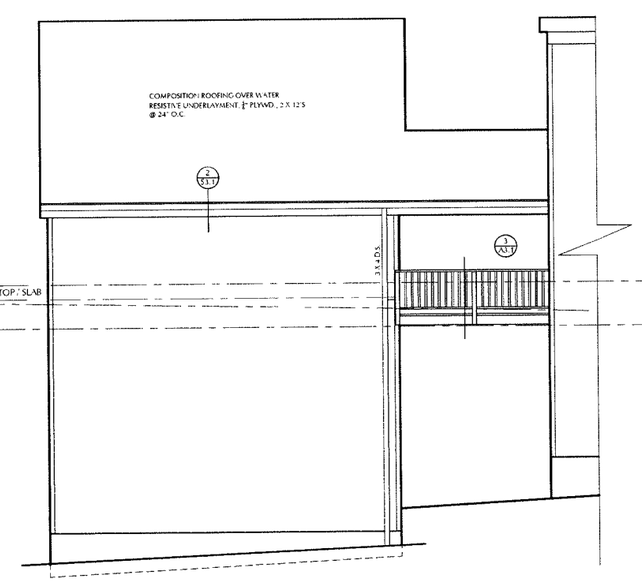

3 A2.2 GARAGE NORTH ELEVATION
1/4" = 1'-0"

Plotted on Jun 23, 2021 - 11:28:57
Kwik- x_24x36 File size: 1.2 MB
S:\Bovet_2021\CAD\SHEET SETS\

REGISTERED ARCHITECT
STATE OF OREGON

Tolovana Architect LLC
368 Elk Creek Rd. Suite 408
Cannon Beach, Oregon 97110

PERMIT SET

HOUSE PLANS FOR:
HARDING
BOVET RESIDENCE
CANNON BEACH OREGON

MARK	DATE	DESCRIPTION

DATE: 5-31-21
JOB:
FILE:
DRAWN:
CHECKED

COPYRIGHT
TOLOVANA ARCHITECTS, LLC
2020

GARAGE
ELEVATIONS

A2.1

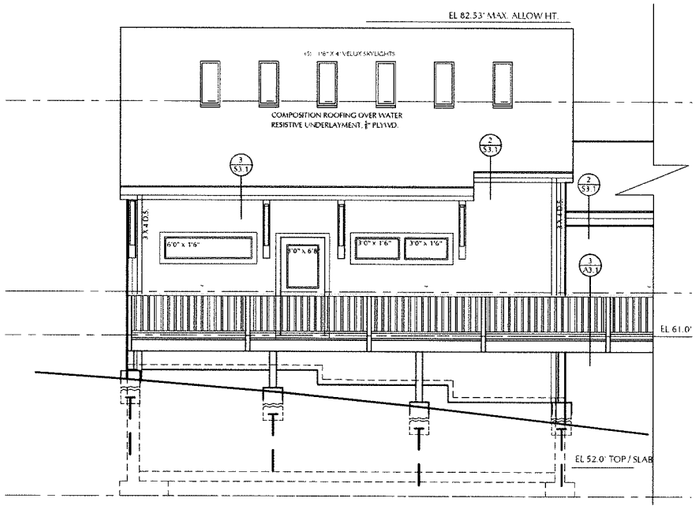

2 A2.1 HOUSE SOUTH ELEVATION
1/4" = 1'-0"

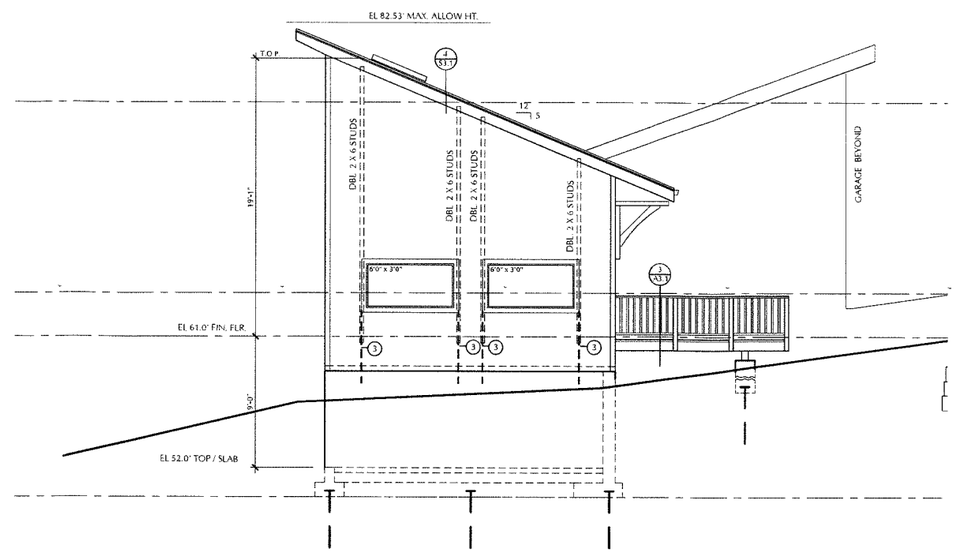

5 A2.1 HOUSE WEST ELEVATION
1/4" = 1'-0"

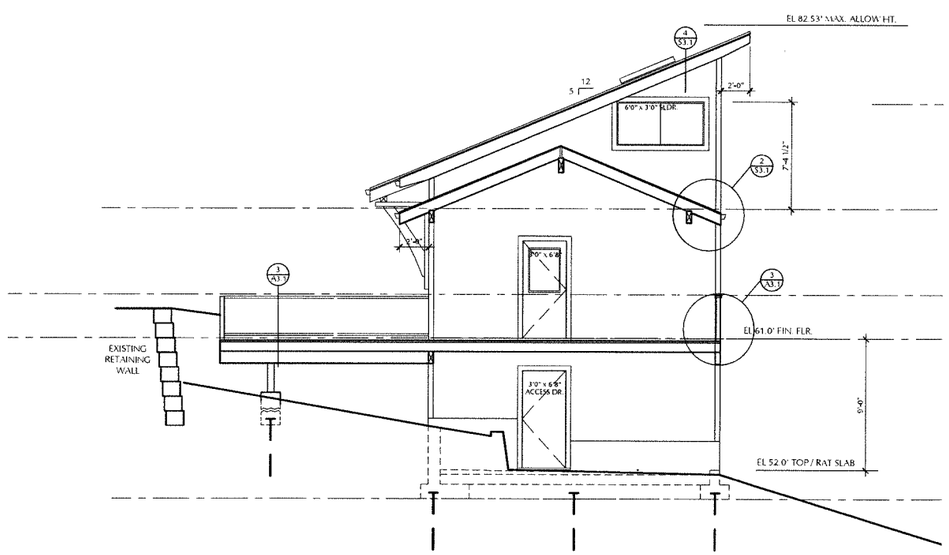

4 A2.1 HOUSE EAST ELEVATION
1/4" = 1'-0"

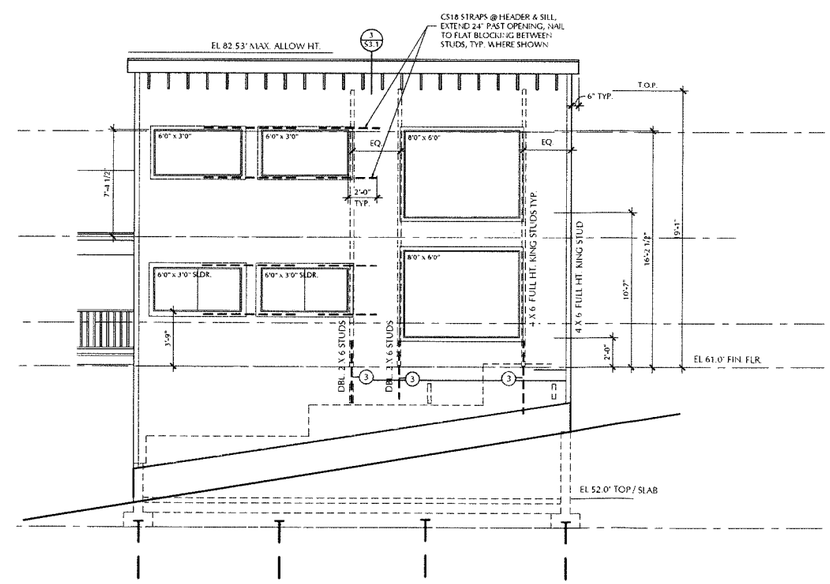

5 A2.1 HOUSE NORTH ELEVATION
1/4" = 1'-0"

Plotted on Jun 23, 2021 - 11:36am
Xref: XR_ELEVATIONS_INV
S:\Bovet_2021\ACAD\SHEET SETS\

REGISTERED ARCHITECT STATE OF OREGON

Tolovana Architect LLC
368 Elk Creek Rd. Suite 408
Cannon Beach, Oregon 97110

PERMIT SET

HOUSE PLANS FOR:
HARDING
BOVET RESIDENCE
CANNON BEACH OREGON

MARK	DATE	DESCRIPTION

DATE: 5-31-21
JOB:
FILE:
DRAWN:
CHECKED:

COPYRIGHT
TOLOVANA ARCHITECTS, LLC
2020

HOUSE ELEVATIONS

A2.2

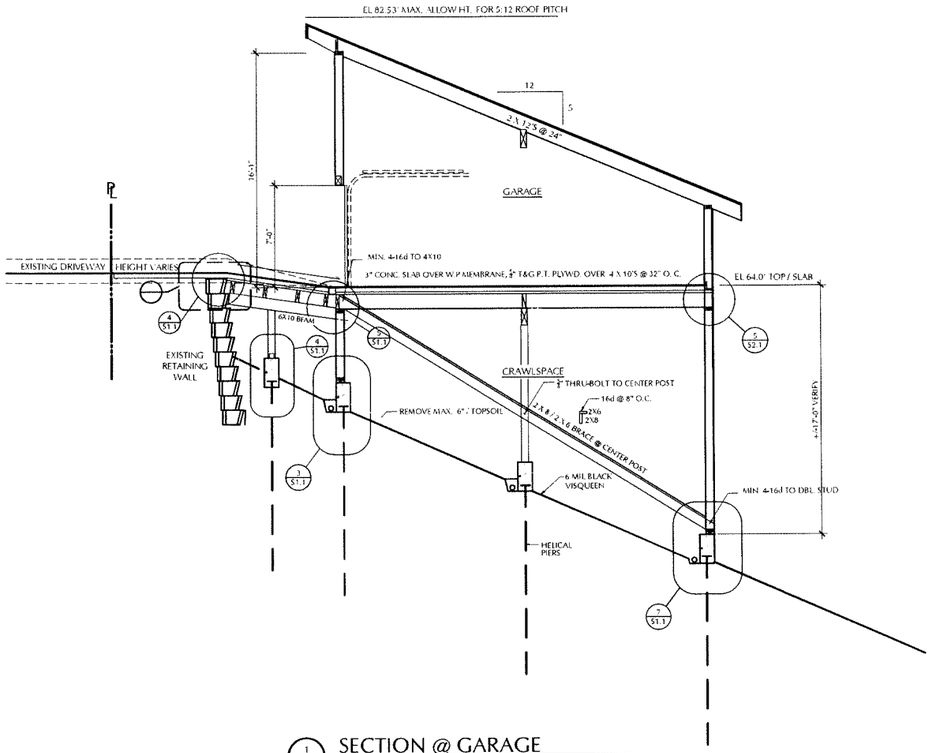

1 A3.1 SECTION @ GARAGE
1/4" = 1'-0"

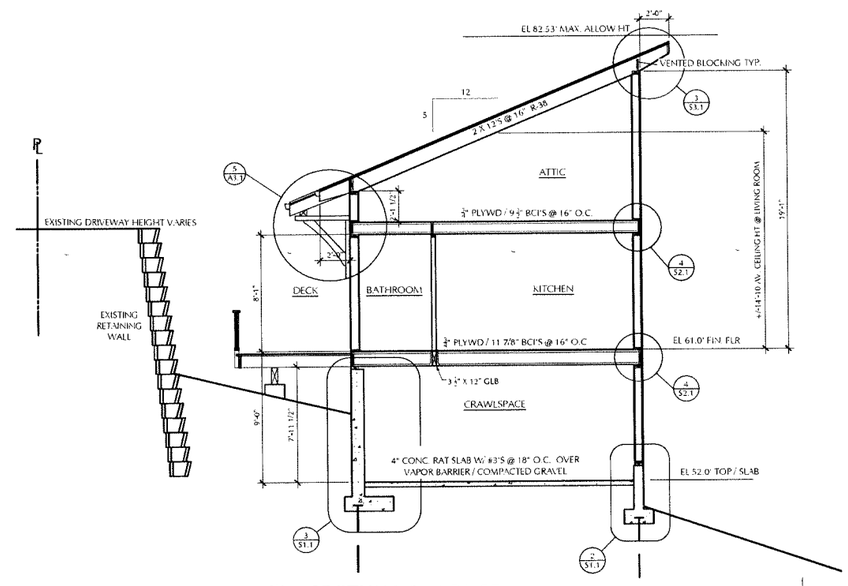

2 A3.1 SECTION @ HOUSE
1/4" = 1'-0"

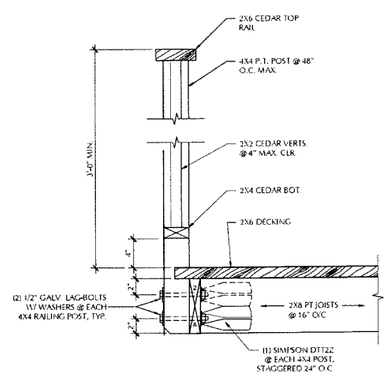

3 A3.1 GUARDRAIL @ HOUSE
1 1/2" = 1'-0"

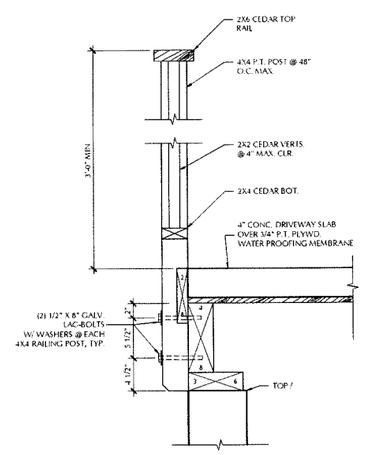

4 A3.1 GUARDRAIL @ DRVWY.
1 1/2" = 1'-0"

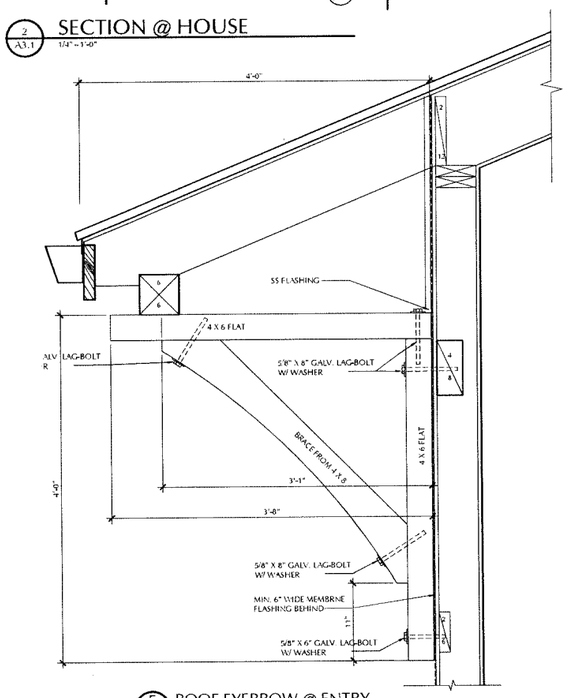

5 A3.1 ROOF EYEBROW @ ENTRY
1 1/2" = 1'-0"

Plotted on Jun 23, 2021 – 11:35am
Xcale: SECTIONS – 24x36 title block
S:\Bowe_2021\ACAD\SHEET SETS\

Tolovana Architect LLC
368 Elk Creek Rd. Suite 408
Cannon Beach, Oregon 97110

PERMIT SET

HOUSE PLANS FOR:
HARDING
BOVET RESIDENCE
CANNON BEACH OREGON

MARK	DATE	DESCRIPTION

DATE: 5-31-21
JOB:
FILE:
DRAWN:
CHECKED:

COPYRIGHT
TOLOVANA ARCHITECTS, LLC
2020

SECTIONS

A3.1

A

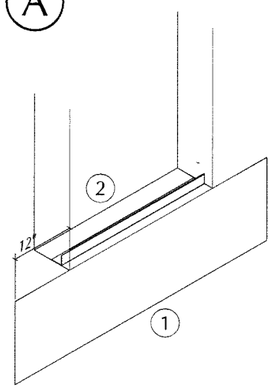

1) INSTALL 18-INCH WIDE BUILDING WRAP ACROSS SILL, LEAVE LOOSE AT BOTTOM EDGE (FASTEN BOTTOM CORNERS ONLY IF WINDY)

2) INSTALL SHEET METAL ANGLE ON SILL FRAMING. SET ¼" INSIDE DEPTH OF WINDOW

B

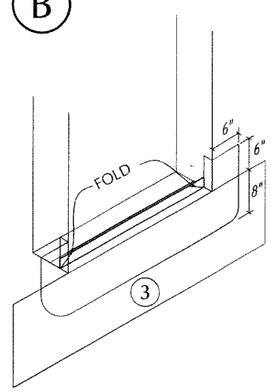

3) APPLY FLEXIBLE MEMBRANE FLASHING ON SILL AND EXTEND MEMBRANE UP SHEET METAL ANGLE. FOLD MEMBRANE AT CORNERS BETWEEN METAL ANGLE AND JAMB FRAMING. EXTEND MEMBRANE UP JAMB FRAMING, ONTO WALL SHEATHING AND DOWN OVER SILL BUILDING WRAP. FASTEN CORNERS PER MANUFACTURERS INSTRUCTIONS.

C

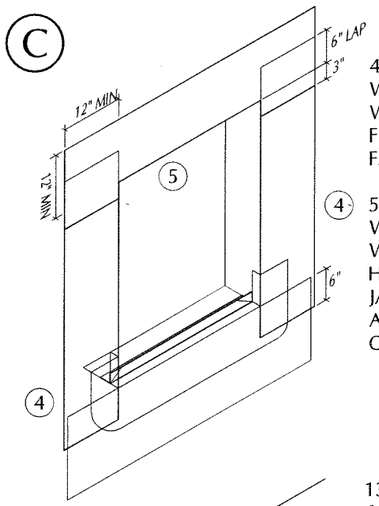

4) INSTALL 18-INCH WIDE BUILDING WRAP EACH JAMB, FLUSH TO INSIDE FACE OF STUD

5) INSTALL 18-INCH WIDE BUILDING WRAP ACROSS HEADER, OVER JAMBS, AND ACROSS BOTTOM OF HEADER

D

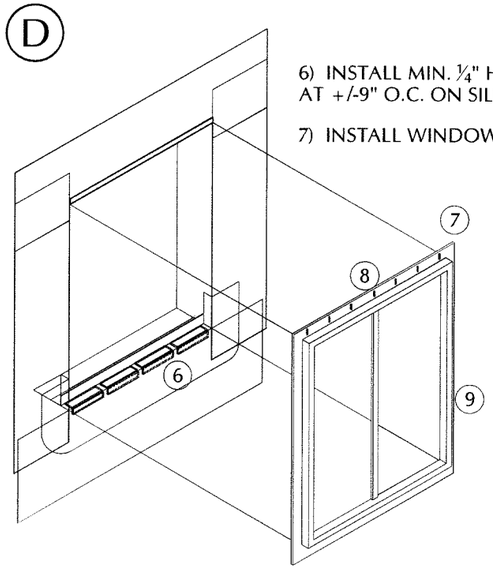

6) INSTALL MIN. ¼" H. PLASTIC SHIMS AT +/-9" O.C. ON SILL FRAMING.

7) INSTALL WINDOW.

8) INSTALL HEAD FASTENERS AT TOP OF 1" LONG VERTICAL SLOTS IN NAIL FLANGE. DO NOT OVER TIGHTEN FASTENERS.

9) INSTALL jAMB FASTENERS.

E

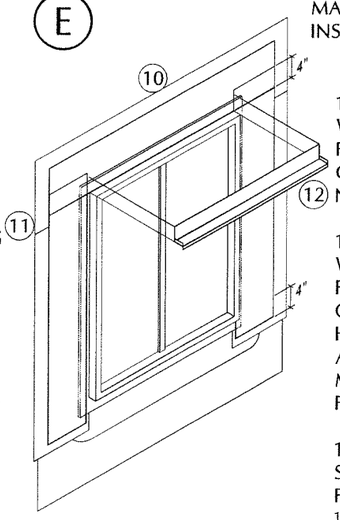

10) INSTALL 9-INCH WIDE MEMBRANE FLASHING LAPPED OVER WINDOW JAMB NAIL FLANGES.

11) INSTALL 9-INCH WIDE MEMBRANE FLASHING LAPPED OVER WINDOW HEAD NAIL FLANGE AND OVER JAMB MEMBRANE FLASHING STRIPS.

12) INSTALL S.S. SHEET METAL HEAD FLASHING WITH MIN. ½" H. END DAMS OVER MEMBRANE FLASHING.

F

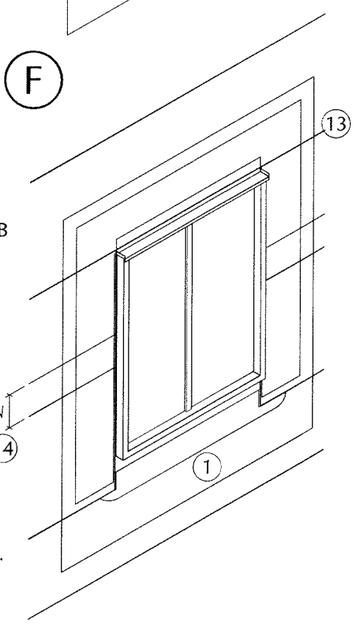

13) INSTALL 2 LAYERS 60 MIN. BUILDING PAPER OVER CLEAN, DRY SURFACES. START AT BOTTOM OF WALL, AND EXTEND BUILDING WRAP UNDER STRIP INSTALLED IN STEP #1.

14) SHINGLE LAP BUILDING PAPER HORIZONTALLY 6 TO 12 INCHES.

15) INSTALL EXTERIOR FINISH SIDING

NOTE:
SIMILAR OPENING WRAP SEQUENCE APPLIES TO OTHER OPENINGS IN EXTERIOR WALLS. REFER TO DETAILS.

1 / A5.1 WINDOW INSTALLATION
NOT TO SCALE

Tolovana Architect LLC
368 Elk Creek Rd. Suite 408
Cannon Beach, Oregon 97110

PERMIT SET

HOUSE PLANS FOR:
HARDING
BOVET RESIDENCE
CANNON BEACH OREGON

MARK	DATE	DESCRIPTION

DATE: 5-31-21
JOB:
FILE:
DRAWN:
CHECKED:

COPYRIGHT
TOLOVANA ARCHITECTS, LLC
2020

WINDOW INSTALLATION SEQUENCE DIAGRAM

A5.1

Plotted on Jun 23, 2021 - 11:35am
Xrefs: *F_24x36 title block, A5.1_WINDOW INSTALL SEQ 10-10Window Seq_2020
S:\Bovet_2021\ACAD\SHEET SETS\

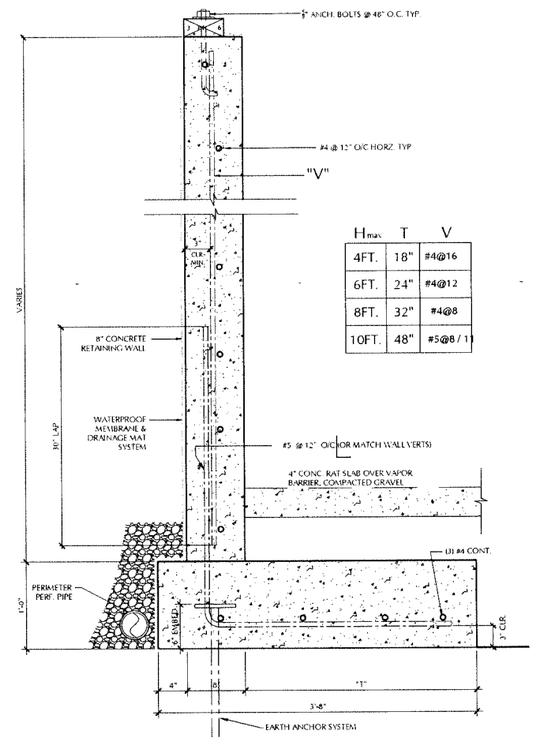

H_{max}	T	V
4FT.	18"	#4@16
6FT.	24"	#4@12
8FT.	32"	#4@8
10FT.	48"	#5@8 / 11

3 S1.1 RETAINING WALL
1 1/2" = 1'-0"

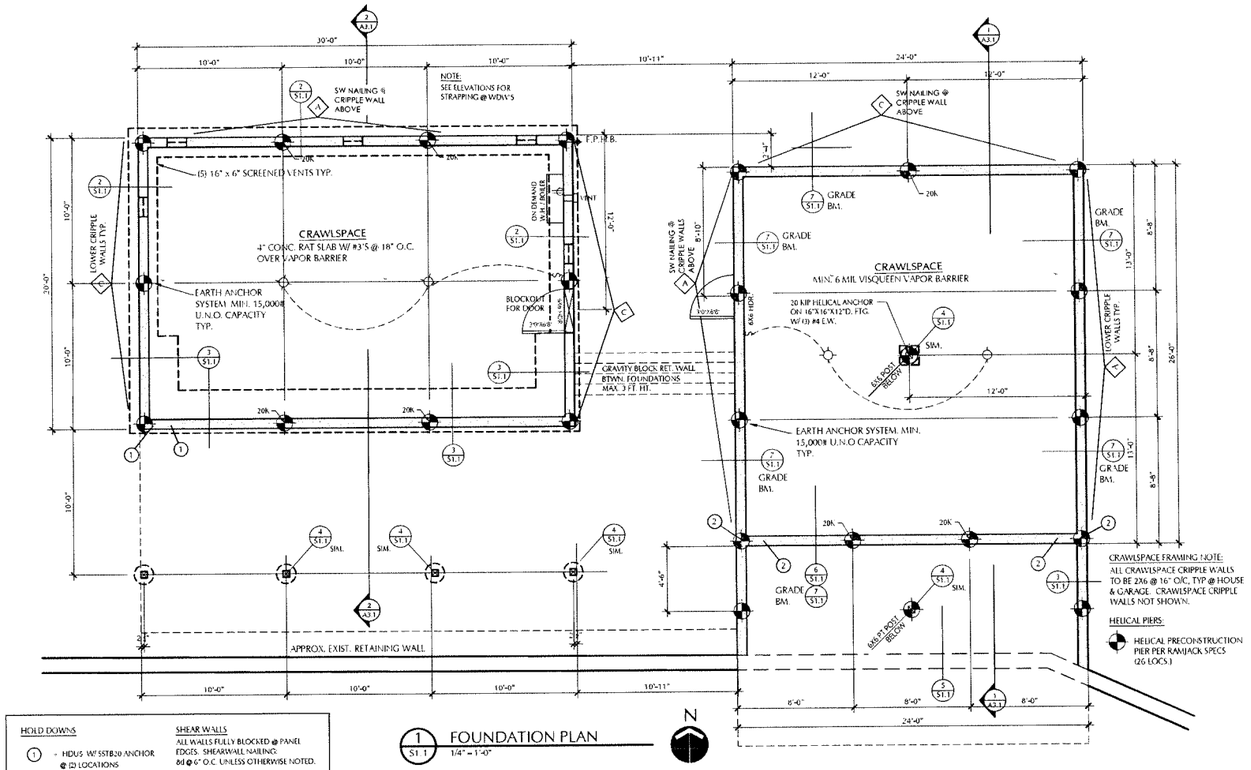

CRAWLSPACE FRAMING NOTE:
ALL CRAWLSPACE CRIPPLE WALLS TO BE 2X6 @ 16" O/C, TYP @ HOUSE & GARAGE. CRAWLSPACE CRIPPLE WALLS NOT SHOWN.

HELICAL PIERS:
HELICAL PRECONSTRUCTION PIER PER RAMJACK SPECS (26 LOCS.)

1 S1.1 FOUNDATION PLAN
1/4" = 1'-0"

HOLD DOWNS
1 - HDUS W/ SSTB20 ANCHOR @ (2) LOCATIONS
2 - HDUS W/ SSTB28 ANCHOR @ (4) LOCATIONS

SHEAR WALLS
ALL WALLS FULLY BLOCKED @ PANEL EDGES. SHEARWALL NAILING: 8d @ 6" O.C. UNLESS OTHERWISE NOTED.
A - SHEARWALL NAILING: 8d @ 4" O.C. @ PANEL EDGES
C - SHEARWALL NAILING: 10d @ 3" O.C. @ PANEL EDGES

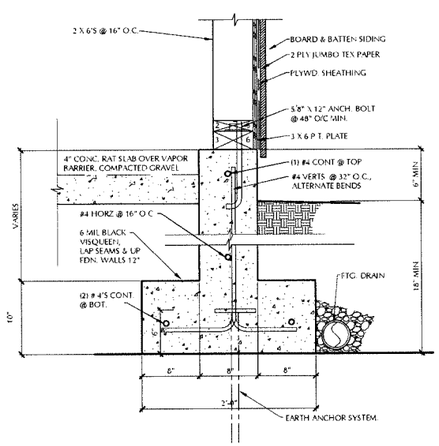

2 S1.1 TYP. FOOTING @ HOUSE
1 1/2" = 1'-0"

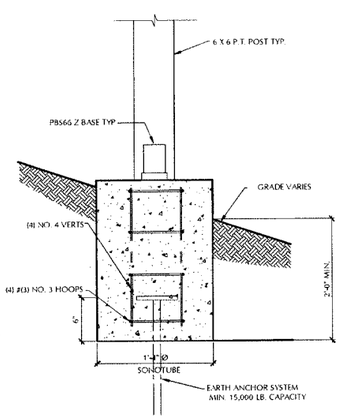

4 S1.1 POST BASE & FTG. @ DRWY. BRIDGE
1 1/2" = 1'-0"

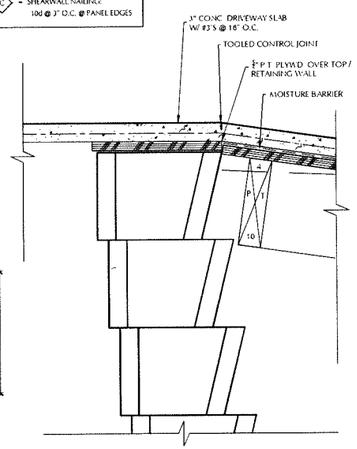

5 S1.1 DRIVEWAY TO WALL
1 1/2" = 1'-0"

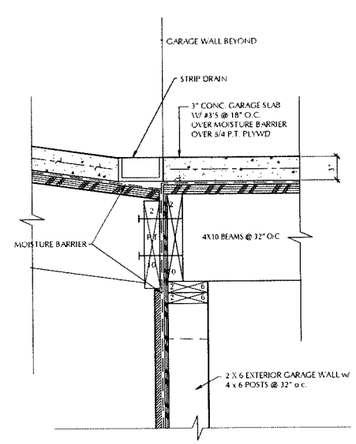

6 S1.1 DRIVEWAY TO GARAGE
1 1/2" = 1'-0"

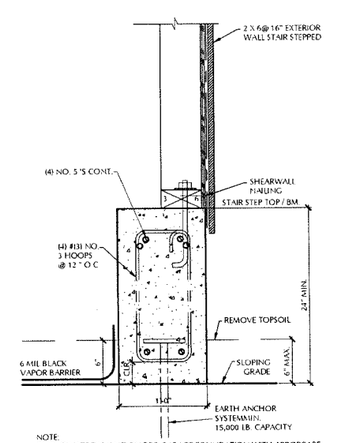

NOTE:
COORDINATE EXCAVATION FOR GARAGE FOUNDATION WITH ARBORCARE TREE ARBORISTS TO AVOID IMPACTING TREE ROOTS WITHIN EXCAVATED AREA.
CONTACT: austin@arborcarenw.com 503-791-0853

7 S1.1 GRADE BEAM AT GARAGE
1 1/2" = 1'-0"

Plotted on Jun 23, 2021 - 11:36am
Xref: XR_FRAMING PLANS xr_24x36 title block XR_ELEVATIONS_DV XR_FP1 XR_FND-FRAMING
S:\Bovet_2021\CAD\SHEET SETS\

REGISTERED ARCHITECT STATE OF OREGON

Tolovana Architect LLC
368 Elk Creek Rd. Suite 408
Cannon Beach, Oregon 97110

PERMIT SET

HOUSE PLANS FOR:
HARDING BOVET RESIDENCE
CANNON BEACH OREGON

MARK	DATE	DESCRIPTION

DATE: 5-31-21
JOB:
FILE:
DRAWN:
CHECKED:

COPYRIGHT
TOLOVANA ARCHITECTS, LLC
2020

FOUNDATION & FRAMING PLANS

S1.1

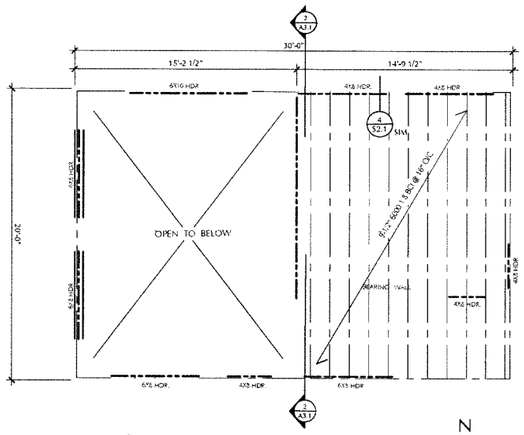
30'-0"
15'-2 1/2"
14'-9 1/2"
6X10 HDR
4X8 HDR
4X6 HDR
OPEN TO BELOW
20'-0"
6X6 HDR
4X8 HDR
6X6 HDR
4X6 HDR
6X6 HDR
4X6 HDR
6X10 HDR
4X6 HDR
4X6 HDR
4X6

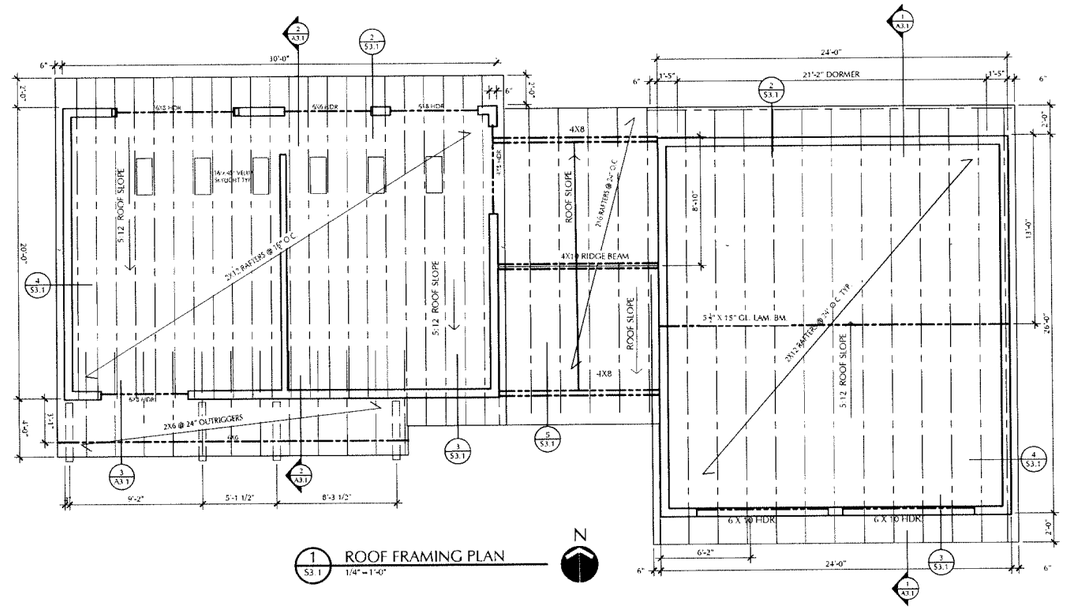

1 / S3.1 ROOF FRAMING PLAN
1/4" = 1'-0"

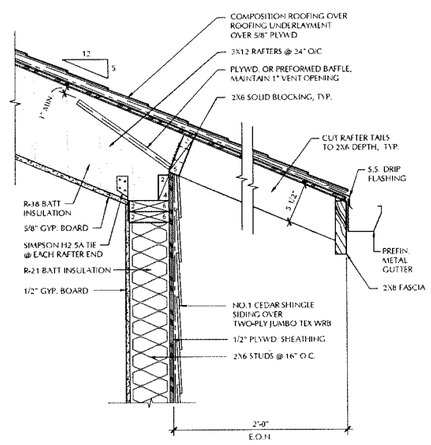

2 / S3.1 TYP. EAVE
1 1/2" = 1'-0"

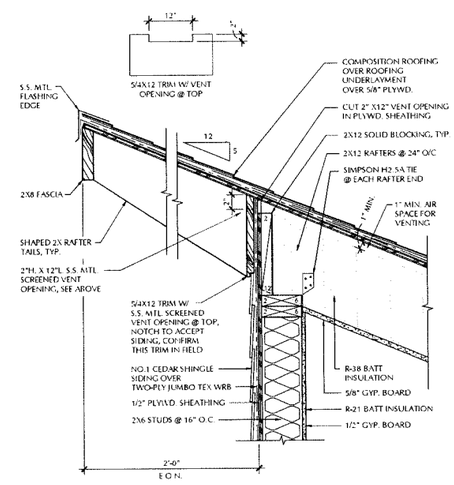

3 / S3.1 TYP. SHED RIDGE
1 1/2" = 1'-0"

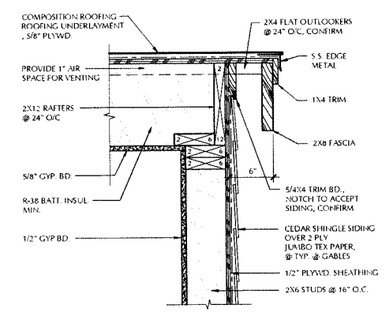

4 / S3.1 TYP. 6" RAKE DETAIL
1 1/2" = 1'-0"

Plotted on: Jun 23, 2021 - 11:35am
Xrefs: XR_FND-FRAMING XR_PP1 ROOF DETAILS 24x36 title block
S:\Bovet_2021\ACAD\SHEET SETS\

REGISTERED ARCHITECT STATE OF OREGON

Tolovana Architect LLC
368 Elk Creek Rd. Suite 408
Cannon Beach, Oregon 97110

PERMIT SET

HOUSE PLANS FOR:
HARDING
BOVET RESIDENCE
CANNON BEACH OREGON

MARK	DATE	DESCRIPTION

DATE: 5-31-21
JOB:
FILE:
DRAWN:
CHECKED

COPYRIGHT
TOLOVANA ARCHITECTS, LLC
2020

ROOF FRAMING PLAN

S3.1

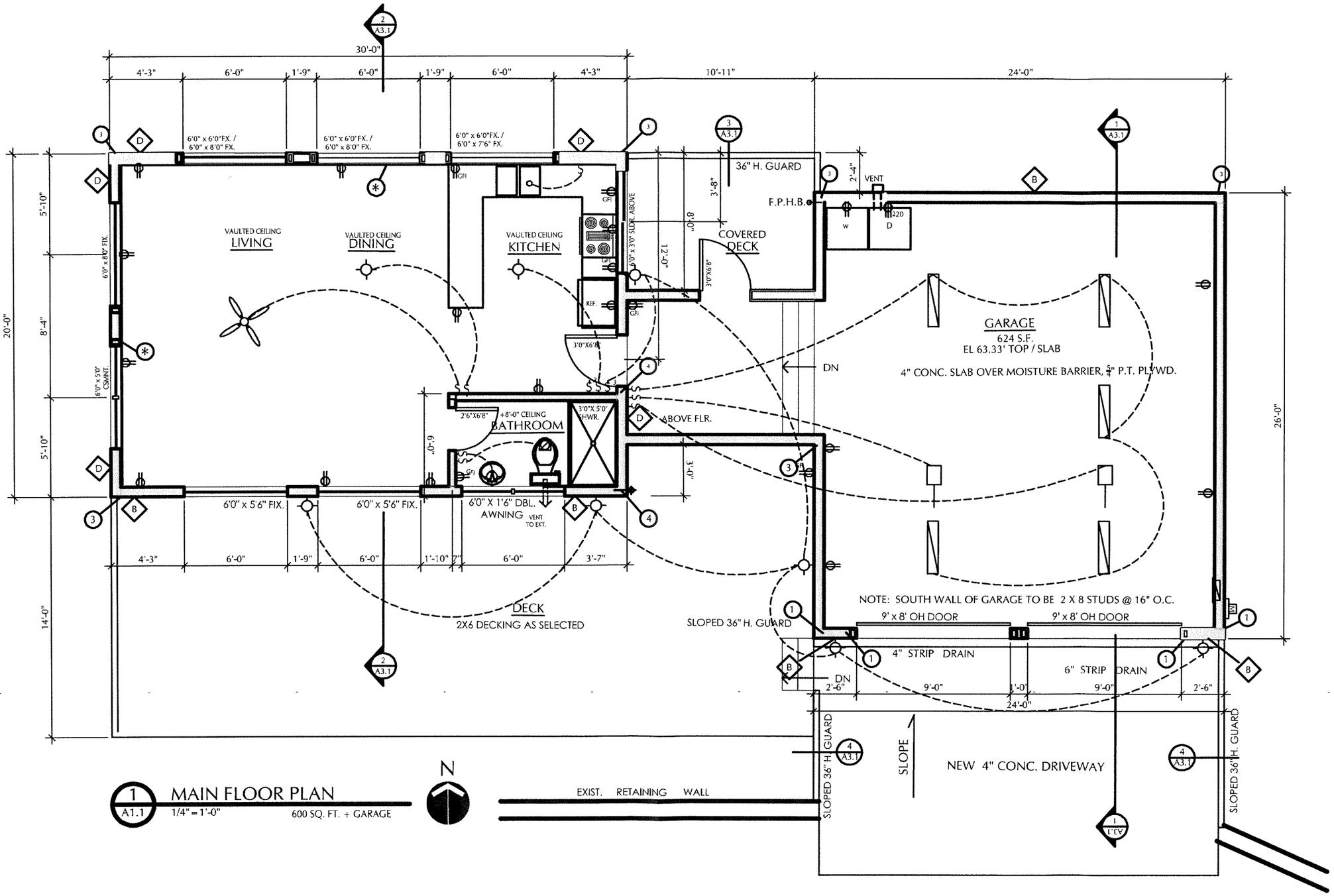

1 A1.1 MAIN FLOOR PLAN

1/4" = 1'-0"

600 SQ. FT. + GARAGE

Cannon Beach Planning Commission

Staff Report Addendum (November 12, 2021):

PUBLIC HEARING AND CONSIDERATION OF **AA 21-01**, JEFF AND JENNIFER HARRISON ADMINISTRATIVE APPEAL OF THE CITY'S APPROVAL OF A BUILDING/DEVELOPMENT PERMIT FOR 544 NORTH LAUREL STREET. THE PROPERTY IS LOCATED AT 544 N. LAUREL STREET (TAX LOT 07000, MAP 51019AD), AND IN A RESIDENTIAL MEDIUM DENSITY (R2) ZONE. THE REQUEST WILL BE REVIEWED PURSUANT TO MUNICIPAL CODE, SECTION 17.88.180, REVIEW CONSISTING OF ADDITIONAL EVIDENCE OR DE NOVO REVIEW AND APPLICABLE SECTONS OF THE ZONING ORDINANCE, CONDITIONS OF APPROVAL OF THE CANNON BEACH PRESERVATION PLANNED DEVELOPMENT SUBDIVISION AND APPROVED PLAT.

Agenda Date: October 28, 2021 **Prepared By**: Jeffrey S. Adams, PhD

GENERAL INFORMATION

NOTICE

Public notice for this October 28th, 2021 Public Hearing is as follows:

A. Notice was mailed and posted at area Post Offices on October 6th, 2021;

DISCLOSURES

Any disclosures (i.e. conflicts of interest, site visits or ex parte communications)?

EXHIBITS

The following Exhibits are attached hereto as referenced. All application documents were received at the Cannon Beach Community Development office on October 20, 2021 unless otherwise noted.

"A" Exhibits – Application Materials

A-1 through 17 provided in October 28th packet

A-18 EXHIBIT 17, Harrison Submittal: email re: including existing loft in FAR calc.;

A-19 EXHIBIT 18, Harrison Submittal: 2nd floor of building plans, Harding garage/loft/studio;

A-20 Harrison Prepared Statement for Oct. 28 Planning Commission Meeting;

A-21 Written Argument & Proposed Findings & Conclusions of Law, dated Nov. 4, 2021;

A-22 Harrison response to comments at Oct. 28 Planning Commission Meeting, dated Nov. 4, 2021;

A-23 Harrison response to November 4 comments, dated November 11, 2021;

A-24 Harrison letter to PC, regarding the living wall, dated June 25, 2020;

A-25 Harrison prepared statement to City Council regarding the living wall, dated June 5, 2018;

A-26 Proposed Revised findings of Fact and Conclusions of Law, Greg Hathaway, dated November 11, 2021;

"B" Exhibits – Agency Comments

None received as of this writing;

"C" Exhibits – Cannon Beach Supplements

C-1 through 26 provided in October 28th packet;

"D" Exhibits – Public Comment

D-1 **provided in October 28th packet**

D-2 Judy & Jim Morton, Email correspondence, dated Oct. 26, 2021;

D-3 Rex & Diane Amos, Email correspondence, dated Oct. 27, 2021;

D-4 Dale & Linda Hintz, Email correspondence, dated Oct. 27, 2021;

D-5 Tommy Huntington, Email correspondence, dated Oct. 27, 2021;

D-6 Phil Morton, Email correspondence, dated Oct. 28, 2021;

D-7 Kent Suter, Email correspondence, dated Oct. 27, 2021;

D-8 Betty Gearen, Email correspondence, dated Nov. 3, 2021;

D-9 Darrell Clukey & Susan Glarum, Email correspondence, dated Nov. 3, 2021;

D-10 Dean Alterman, Email correspondence, dated Nov. 4, 2021;

Staff Comments:

There are a couple of issues that are brought up repeatedly by both the applicant, the Najimis, and the appellant, the Harrisons. This addendum is intended to respond to those issues and identify City staff's approach.

Calculating the FAR and the Discrepancy Between the City, Applicant, and Appellant.

The first issue raised by the appellant is that "the Floor Area Ratio worksheet calculation used to approve the Building Permit is in error." This memorandum will explain how the Floor Area Ratio (FAR) is calculated and explain the misunderstanding embedded in this appeal issue.

The term FAR is defined in CBMC 17.04.245 as follows:

> "'Floor area ratio' means the gross floor area divided by the lot area and is usually expressed as a decimal fraction."

Thus, in calculating the FAR, you must begin with the "gross floor area" which is also defined by the code in CBMC 17.04.283:

> "'Gross floor area' means the sum, in square feet, of the gross horizontal areas of all floors of a building, as measured from the exterior walls of a building, including supporting columns and unsupported wall projections (except eaves, uncovered balconies, fireplaces and similar architectural features), or if appropriate, from the center line of a dividing wall between buildings. Gross floor area shall include:
>
> 1. Garages and carports.
>
> 2. Entirely closed porches.
>
> 3. Basement or attic areas determined to be habitable by the city's building official, based on the definitions in the building code.
>
> 4. Unhabitable basements areas where the finished floor level of the first floor above the basement is more than three feet above the average existing grade around the perimeter of the building's foundation.
>
> In addition the calculation of gross floor area shall include the following:
>
> 5. All portions of the floor area of a story where the distance between the finished floor and the average of the top of the framed walls that support the roof system measures more than fifteen feet shall be counted as two hundred percent of that floor area.

In this case, the Cannon Beach Building Official reviewed the plans and made a determination under the state building code regarding what areas are "habitable," consistent with CBMC 17.03.283(3), and that calculation was used to determine that the "gross floor area" of the structure is 4,384 square feet and the lot area is 7,500 SF, meaning the FAR is .58.

This is important because CBMC 17.14.040(D) provides that the maximum FAR in the R2 zone is .6 (or, expressed in a different way, the maximum amount of gross floor area cannot exceed 60% of the area of a lot). Thus, under the City's code, using the definition from the code, the proposed residence fully complies with the FAR.

This straightforward application of the City's FAR requirements becomes muddied because Condition 3 of the final approval of the Planned Development contains conflicting criteria for calculating the square-footage under consideration in relation to 'habitable' space. Condition 3 provides as follows:

> "3. The total square footage of habitable space on the site shall not exceed 9,000 square feet. Habitable space includes enclosed areas in residences including all floors of living space and excludes driveways, decks, porches, garages, and uninhabitable accessory buildings. Unfinished attics, crawl spaces, storage areas and similar spaces are not habitable spaces. Sleeping lofts, detached accessory sleeping quarters, fully enclosed sun rooms, and hallways are habitable space. The habitable spaces shall be distributed initially to allow 2,000 square feet to Lot 1, 3,300 square feet to Lot 2, 2,700 square feet to Lot 3 and 1,000 square feet to Lot 4. Those allocations may be amended by future

owners of the lots, but in no case may any amendment allow total square footage of habitable space on the site to exceed 9,000 square feet."

The argument presented by the appellants revolves around the 210 square-feet of 'loft' area of the Harding Garage (Shown in yellow in the diagram below), which, according to the Cannon Beach Building Official and the state building code, is 'non-habitable.' As the diagram below shows, the 210 SF in question has no stairs or other fixed forms of access. The diagram's blue square, the vaulted space above the garage floor, has been double-counted under CBMC 17.04.283(4). The fact that the PUD conditions of approval provide for a different definition of "habitable space" in a limitation of overall square footage in the PUD does not change the requirement for the City to use the definitions in the code in calculating the FAR under CBMC 17.14.040(D).

This disjunction between the definition of "habitable space" in the Conditions of Approval and the code's FAR requirements, both put limits on what can be built on the lot and, because the terms don't align, there are ripple effects on other considerations. For instance, the Conditions of Approval exclude garages from habitable space calculations and yet, under the code, GFA and thus, FAR, include garages. For instance, if we are to take the maximum habitable space as defined by Condition 3, the habitable square footage for Lot 1 comes to 3,090 SF, while the GFA is calculated at 4,384 SF, leading to a FAR of .58 (or 58%).

In any event, as explained above, the 'habitability' determination for purposes of determining FAR is based on the state building code and under the jurisdiction of the Cannon Beach Building Official. The appellant's argument that the area in the Harding Garage should be treated and calculated as 'sleeping' loft, or 'habitable' space simply because it is 'finished,' rather than a 'storage' loft, and 'non-habitable,' seems to run contrary to his concern that this accessory structure remain a garage and not a guest house or some form of 'habitable' space, which would require a certificate of occupancy and which would then be required to meet the Oregon Building Code for 'habitable' space. It appears the appellants would like the City to treat this as 'habitable' space so that it exceeds the 'maximum' habitable space allowed under Condition 3 for the lot and exceed the permitted FAR, and yet, not allow it to actually be habitable space. Should the City determine the loft area is, in fact, habitable, it would likely be difficult to prevent the owner from seeking a certificate of occupancy and then the City would have no grounds to prohibit someone from 'occupying' the space overnight.

As the Hardings stated at the previous hearing, the City has been asked to visit the property, to investigate just such complaints, and on December 8th, 2020, the City found no evidence that the storage loft was being utilized for any other purpose but storage. The 'new evidence,' or appellant's pictures taken from inside the Harding garage, highlight what they claim to be the 'finished' nature of the accessory structure, pointing out electrical outlets, skylights, and other features; however, many accessory structures in Cannon Beach have electrical outlets, windows, and skylights. In fact, many accessory structures are utilized as secondary office spaces or workspaces for home occupations or hobbies. Garages across America have been the birthplace for companies ranging from Amazon to Apple, serving a wide range of needs and many are in some state of 'finished' space. When the appellant goes further to state that only one garage is permitted according to the zoning code, that simply is not consistent with the R2 Zoning district language, CBMC 17.14.020, which states under 'uses permitted outright, that 'In an R2 zone the following uses and their accessory <u>uses</u> are permitted outright,' it doesn't limit each unit to just one structure or one use, or one garage (emphasis added). In fact, the R2

district is for medium density residential uses, for up to eleven dwelling units per net acre, where two-family dwellings are permitted outright and thus, two or more accessory structures, including garages, can be found across the city.

The Effect of the LUBA Decision on the Previous Application.

Both the appellants and the applicants make arguments about the previous LUBA decision and its effect on the new application for the development of a house on this property. The Harrisons essentially argue that this is an entirely new application and the City is free to consider any issue and make any appropriate decision on this applicant. In opposition, the Najimis argue that the City already made a decision about an almost identical house (with a turret) and that any issue that was resolved in that decision and was not appealed was conclusively decided and cannot be revisited by the City in this decision. While both positions have some appeal, the correct position is likely somewhere in the middle.

There is one position that all parties appear to agree on. In the previous LUBA decision, LUBA was clear that the City was not to apply any standards from the PUD chapter and could not deny an application for failing to comply with those provisions:

> "We conclude above that the city properly denied the building permit application because the turret failed to satisfy the height limitation in CBMC 17. l 4.040(E). That is a permissible basis for denial. However, we emphasize that, as explained in our resolution of the first and third assignments of error, the city has no authority to apply the PD standards to an application for a building permit for a lot in the Subdivision, and it may not deny a building permit application that otherwise complies with the applicable building permit standards for failure of the Subdivision or an individual lot in the Subdivision to provide common open space."

Beyond that, the impact of LUBA decisions has been laid out in opinions from LUBA and the Court of Appeals.

In a case from this city, *Holland v. City of Cannon Beach*, 154 Or App 450, 962 P2d 701 (1998), the Oregon Court of Appeals laid out some limitations on the City's ability to change its mind on how to apply a criteria from its code, but that case was significantly different from this one, and the facts of the case are important. The *Holland* case involved the application of certain "slope and density" design standards. Before Mr. Holland filed his application, the then city attorney had concluded that the slope/density provisions had been implicitly repealed and the city did not apply them to Mr. Holland's application. Nonetheless, the city concluded the application violated other provisions of its plan and rejected it. The city's decision was appealed to LUBA and the Court of Appeals, which remanded the city's decision, concluding that the city was wrong in applying those other plan provisions.

When the matter came back to the city on remand, the city council concluded that, in fact, the slope/density standards had not been repealed, applied them to Mr. Holland's application, and denied the application. Mr. Holland again appealed to LUBA and the Court of Appeals overturned the decision on remand. LUBA has explained the ruling as follows:

> "With respect to ORS 227.178(3), we understand *Holland* to hold that, once a local government has taken a position in the course of a permit proceeding that a land use

> regulation is not an approval criterion, the local government cannot change that position on remand, which the court viewed as part of the same permit proceeding and apply the regulation to approve or deny the permit application. To do so is a de facto 'shifting of the goal posts' contrary to the statute, because it effectively allows the local government to approve or deny a permit application based on standards that the local government deemed were not applicable at the time the permit application was filed." *Bemis v. City of Ashland*, 48 Or LUBA 42 (2004) (emphasis added).

In other words, the city cannot change its interpretation of the applicability of a criterion "in the course of a permit proceeding." However, the matter before the Planning Commission now is not part of the same "permit proceeding" as the Najimis' initial application. The city denied that application, the applicant appealed to LUBA, which affirmed the city, and LUBA's decision was not appealed further. Therefore, the city is not bound by any interpretation it may have made in the applicant's first application.

However, that does not mean that the City has free reign to make any interpretation it may like. The LUBA case cited above, *Bemis v. City of Ashland*, 48 Or LUBA 42 (2004), provides some additional limitations on the City adopting new interpretations. In *Bemis*, the city of Ashland had interpreted its code in one way, but changed its interpretation when a new application was submitted. LUBA first acknowledged the language in *Holland* that the Court of Appeals accepted "at least as an abstract proposition, the premise that a local government may 'correct' its earlier interpretations of its legislation." But LUBA then noted additional limitations on a city changing its interpretations:

> "A local government may not change an existing interpretation where such reinterpretation is 'the product of a design to act arbitrarily or inconsistently from case to case[.]' *Alexanderson v. Clackamas County*, 126 Or App at 552. Finally, where a local government changes a pre-existing interpretation in the course of a permit proceeding, it must provide participants the opportunity to address the reinterpretation and, in some circumstances, must re-open the evidentiary record to allow the parties the opportunity to present new evidence with respect to whether the application complies with applicable approval standards, as reinterpreted. *Gutoski v. Lane County*, 155 Or App 369; *Wicks v. City of Reedsport,* 29 Or LUBA 8 (1995)."

In sum, except as explained by LUBA in its decision regarding the use of PUD criteria, the planning commission is not necessarily bound by any decision made in the prior proceeding by the city. However, to the extent the planning commission reaches a different conclusion than it did previously, it would be well served to provide an explanation of why the different conclusion is not adopted by design to frustrate this particular application.

<u>The Living Wall</u>.

The appellants continue to argue that this application must be rejected because of the living wall and the perceived violation of Condition 17 of the PUD. That condition provided as follows:

> "17. Before permits for the driveway retaining wall are approved the applicant shall provide to the City an executed contract with a landscape professional responsible for the installation and maintenance of plant materials on the wall and shall provide a

> timeline for the establishment of plantings on the wall. If plants are not established within those timelines, the City may take any necessary enforcement actions to assure that the requirements of the final plan and this condition are met"

As noted previously, City staff found this condition satisfied pursuant to the material from Mr. Vasquez, of Vasquez Yard & Tree Work, Inc. Whether that company qualifies as a 'landscape professional,' and whether Exhibit A-13 is an 'executed contract,' with timeline, is a question related to the installation of the driveway retaining wall, as the condition explicitly states that the condition must be satisfied "[b]efore permits for the driveway retaining wall are approved..." there is no authority to re-word this condition of approval related to driveway and retaining wall permits to apply to a different building permit. Staff would note, as provided in a previous staff report, 'to the extent that the planting is not successful, Condition 17 authorizes the City to 'take any necessary enforcement actions.'" The review of this building permit is limited to CBMC Title 15, and the applicable parts of CBMC Title 17, as well as the applicable parts of the PUD conditions of approval. None of those provisions authorize the City to refuse to issue a building permit on this basis. The City may take "enforcement action" under its code, but that does not extend to allowing it to refuse to issue a building permit that otherwise meets the requirements of its code and the PUD.

Figures

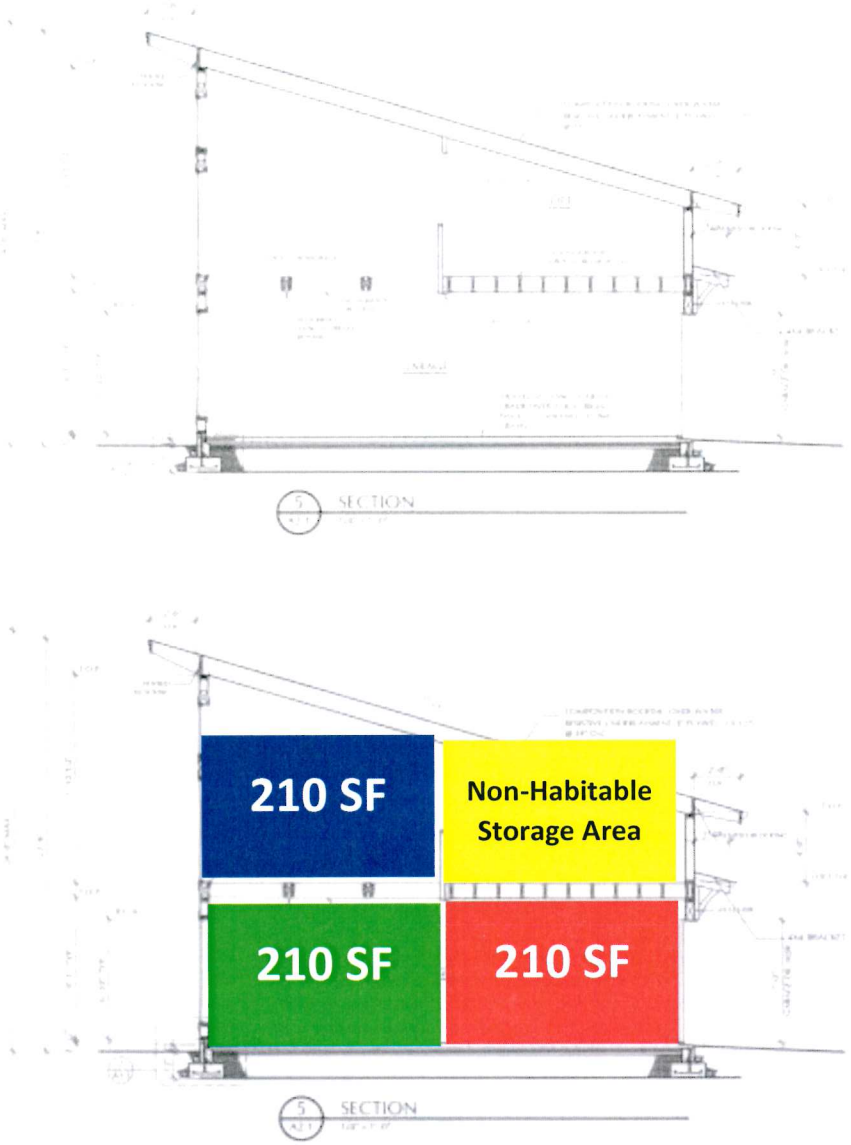

Fig. 1. Harding Accessory Structure, Elevations, dated March 22, 2019

3. The total square footage of habitable space on the site shall not exceed 9,000 square feet. Habitable space includes the enclosed areas in residences including all floors of living space and excludes driveways, decks, porches, garages, and uninhabitable accessory buildings. Unfinished attics, crawl spaces, storage areas and similar spaces are not habitable space. Sleeping lofts, detached accessory sleeping quarters, fully enclosed sun rooms, and hallways are habitable space. The habitable spaces shall be distributed initially to allow 2,000 square feet to Lot 1, 3,300 square feet to Lot 2, 2,700 square feet to Lot 3 and 1,000 square feet to Lot 4. Those allocations may be amended by future owners of the lots, but in no case may any amendment allow the total square footage of habitable space on the site exceed 9,000 square feet.

Condition 3, of the Conditions of Approval, p. 13 of 15, Findings PD 15-01, March 8, 2016

17.04.283 Gross floor area.

"Gross floor area" means the sum, in square feet, of the gross horizontal areas of all floors of a building, as measured from the exterior walls of a building, including supporting columns and unsupported wall projections (except eaves, uncovered balconies, fireplaces and similar architectural features), or if appropriate, from the center line of a dividing wall between buildings. Gross floor area shall include:

2. Entirely closed porches.

1. Garages and carports.

3. Basement or attic areas determined to be habitable by the city's building official, based on the definitions in the building code.

4. Unhabitable basements areas where the finished floor level of the first floor above the basement is more than three feet above the average existing grade around the perimeter of the building's foundation.

In addition the calculation of gross floor area shall include the following:

5. All portions of the floor area of a story where the distance between the finished floor and the average of the top of the framed walls that support the roof system measures more than fifteen feet shall be counted as two hundred percent of that floor area.

Gross Floor Area Definition, CBMC

7/15/2021

Appendix

Worksheet – Floor Area Ratio

I. The maximum FAR in the R1, R2, RAM, R3 and RM zones is .6
The maximum FAR in the RM zone is .5
The maximum FAR in the RE zone for a lot 5,000 square feet or less is .6
The maximum FAR in the RE zone for a lot 5,000 square feet or more is .5

II. Calculation of FAR
A. Lot Size: _____ sq. ft. (A)

A. Gross Floor Area: (see definition below)
1. Basement _____ sq. ft.
2. 1st Story 1,214 sq. ft.
3. 2nd Story 2,170 sq. ft.
4. Loft _____ sq. ft.
5. Garage or Carport _____ sq. ft.
6. Habitable Accessory Structures _____ sq. ft. **630 SF**
(e.g. accessory dwelling)

TOTAL _____ sq. ft. (B) **4384 SF**

C. Divide Total (B) by (A) _____ FAR **.58**

OK 7/15/2021

Definition of Gross Floor Area

Gross Floor Area is the sum, in square feet, of the gross horizontal areas of all floors of a building, as measured from the exterior walls of a building, including supporting columns and unsupported wall projections (except eaves, uncovered balconies, fireplaces and similar architectural features), or if appropriate, from the center line of a dividing wall between buildings.

Gross floor area includes:

- Garages and carports
- Entirely enclosed porches
- Basement or attic areas determined to be habitable by the City's Building Official, based on the definitions in the building code.
- Uninhabitable basement areas where the finished floor level of the first floor above the basement is more than three feet above the average existing grade around the perimeter of the buildings foundation
- All portions of the floor area of a story where the distance between the finished floor and the average of the top of the framed walls that support the roof system measures more than 15 feet shall be counted as 200% of that floor area.

Revised FAR Worksheet, dated July 15, 2021

City of Cannon Beach
Building Codes Division
Tree Permit Applications
January 2022

Date	Permit #	Name	Location	Permit Fee Paid	Notes	Number Removed	Number of dead/dying removed	Required to Replant
1/3/2022		City of CB	N Hemlock ROW (620 Ecola Park Road)	0.00	City ROW removal	11	0	0
1/4/2022		Cannon Beach Conf.	324 N. Spruce	50.00		1	0	1
1/4/2022		Joanne L. Davis Trust	348 E. Jackson St.	50.00		4	2	0
1/4/2022		Schulte	3964 S. Hemlock	50.00		3	0	3
1/10/2022		Bruton	648 S. Spruce St.	50.00		1	0	1
1/19/2022		Coleman	3615 S. Spruce St.	50.00		1	0	1
1/19/2022		Kiersey & McMillan	115 N Hemlock	50.00		1	0	1
1/24/2022		Jenkins	915 S Hemlock	100.00	New SFR	21		4
1/25/2022		Haystack Gardens	148 E Gower	50.00		2	0	2
PENDING:								
Number of Native Trees Planted by City Staff: 0								